Technical data:

Input values:
Input voltage:
+24V DC (SELV/ PELV)
Residual ripple of power supply
< 5% for one-phase, 2% for three-phase
Range of working voltage
18-30 VDC
Frequency of power ON/OFF max 0,5Hz
Suppressor diode 36V
⚠ **No** reverse polarity protection
Total operating current: 40A (0…+20%)

Maximum summation current of
+24V terminals: 40A

Output values:
Nominal output voltage:
24V DC, corresponding to the input voltage
Voltage drop at 10A per each load branch:
typical 200mV
Turn ON capacity:
max. 20mF*
Internal fuse: 10A delay fuse for each channel

Signalling: See "Displays"
Environment:
Storing temperature: -40°C to +80°C
Environmental temperature: 0 to +55°C
Cooling by natural convection
Safety:
Rated insulation voltage: 50V
Degree of pollution: 2
Classification of over-voltage III
Additional output protection:
10A fuse for each channel internal
(UL 248-14)
Regulations:
EN 60529: Protective system - IP20
EN 61000-6-2: Immunity to interference
EN 61000-6-3: Interference emission class B
EN 60068-2-6: Oscillating test
EN 60068-2-27: Shock test

Weight: ca. 160g
Measurements LxWxD: 90x70x80 mm

* Dependent on: component tolerance, conduit length, used power supply, load current, selected current range

Schematic circuit diagram:

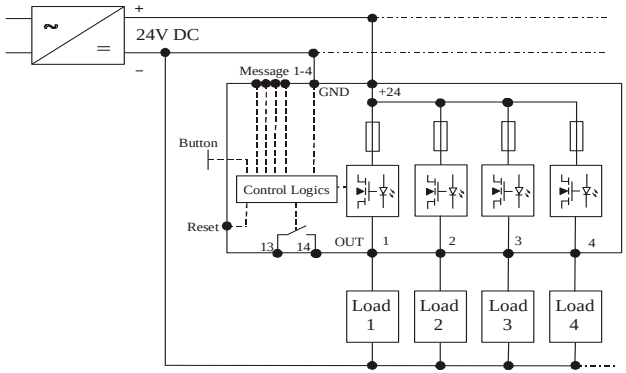

Notice:
Please pay attention to wire heating in relationship of its cross section, ambient temperature, current and the used fuse. The in 4 levels settable channel current serves as the wire protection and device protection conform to EN60204-1, referring to the maximal permissible channel current. For lucid reasons this installation instructions does not contain detailed information to all types of this product and may not consider each fictitious case of erection, operation or installation.
Continuing information may be taken from the data sheet or from our homepage in the internet http://www.murrelektronik.com.
Technical alterations are reserved at any time.
© 2009 Murrelektronik GmbH, Oppenweiler
All rights reserved. Each reprint, even in parts, requires our written consent.

Murrelektronik GmbH P.O. Box 1165 71567 Oppenweiler Telefon +49(0)7191/47-0
GERMANY Falkenstrasse 3 71570 Oppenweiler Telefax +49(0)7191/47-130

Installation instructions V3.8
MICO 4.10 Art.-No.: 9000-41034-0401000
Murrelektronik Intelligent Current Operator

MICO 4.10 Art.-No. 9000-41034-0401000

Installation instructions

Wiring diagram:

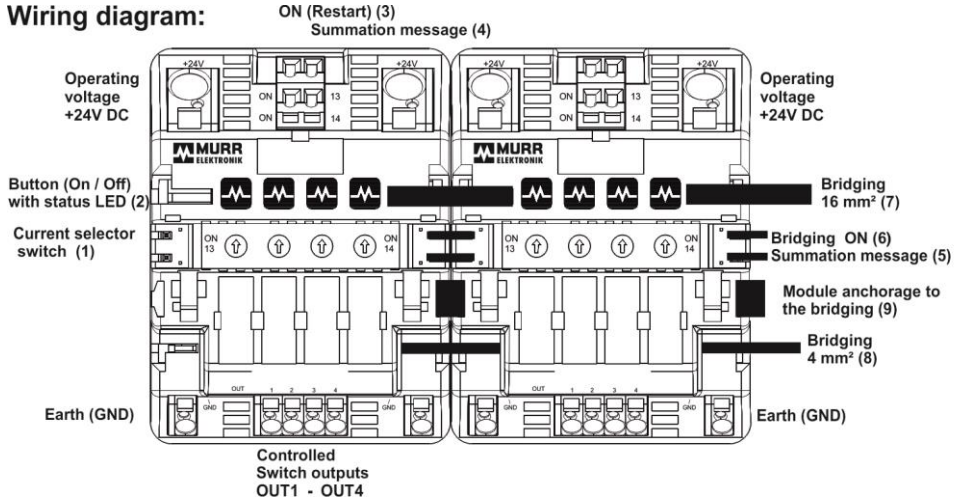

Functional description:
MICO 4.10 is a 4-channel electronic auxiliary circuit switch and serves as current monitoring. The operating voltage (+24V DC/at least 20A) is split into 4 current monitored load circuits (channels). When engaging the operating voltage the switched-on channels are time-delay activated (time-delay of each channel = 75 ms) to avoid overload current. The current selector switches **(1)** enable an independent setting of the operating currents of 4A, 6A, 8A or 10A (see disconnecting characteristic). When exceeding the operating current the corresponding channel will be disconnected pursuant to the disconnecting characteristic. In the event of voltage dip or power failure the current operating condition will be saved and reestablished after the recovery of the supply voltage. The setting of the current range during operation leads to the disconnection of the channel. It may only be switched on manually. Each channel may be manually connected or disconnected through the buttons **(2)**. The current operating condition is signalised by the LED **(2)** – (red/green, see displays). All channels disconnected due to overload may be activated through ON (restart) **(3)** – see restart. In addition, the module is provided with a potential-free message output **(4)** to establish a summation message (see summation message). A bridging concept permits the lining-up of multiple modules (maximum operating current 40A) without wiring. For this purpose a bridging set is available as an option (see bridging set).

Bridging set: The bridging set minimises the efforts of wiring if multiple modules are joined together.
It offers the possibility of bridging the following potentials:
+24V DC **(7)**, GND **(8)**, ON **(6)** and summary message **(5)**. A connecting piece is necessary to anchor both modules **(9)**. The bridging set is optionally available under:
item no.: 9000-41034-0000001 (packing unit 10 pieces)
item no.: 9000-41034-0000002 (packing unit 1 pieces)

Safety instructions:

Warning: This equipment is only suitable for the operation on +24V DC (protection low voltage). The direct connection of this equipment may cause death, severe bodily injuries and considerable property damage. Only competent and qualified personnel may work on this equipment or in its proximity. The perfect and safe operation of this equipment requires the appropriate transportation, professional storage, erection and installation. Without suitable backup fuse or short-circuit protection measures, fires can occur. Use a suitable backup fuse or a short-circuit proof battery pack.

Attention:

- Only trained personnel shall open this equipment. Electrostatic sensitive device (ESD).
- During service work when manually disconnecting MICO, the operating company shall ensure that the system is protected against unintended reconnection (according to the currently applicable provisions BGV A3 (Trade Association Ordinance) or. EN 50110-1).
- Parallel switching of multiple load branches for increase of power is not permitted.
- Series connection of several MICO module to produce selective switch-off-characteristic is not allowed.
- A generated voltage at output is not allowed to be durably higher than the input voltage.

Notice: The GND connection of the equipment merely serves to supply the internal electronics. The O voltage of the consumer shall be conducted directly to the power supply through separate lines.
The conductor cross-sections and line lengths must be adapted to the adjusted current range.
In battery operation, the supply line between the battery and the MICO must not exceed ≤6 m.

Recommendation: - Adjust the current range only if the channel is disconnected (red LED).
- Lay GND wire as near and parallel as possible to the 24V lines.

Installation: For the installation the pertinent DIN/VDE regulations or country-specific rules must be complied with. Assemble on support bar TH 35 pursuant to EN 60715. Due to operation-related heating the equipment must be assembled vertically so that the input terminals are on top. A free space of 30 mm above and below the equipment should be complied with. The connection of the supply voltage (24V DC) must be performed in accordance with VDE 100 and VDE 0160 and shall only be connected to a power supply with "safe separation" (SELV / PELV) corresponding to EN 60950-1 or 61558-2-6.

Condition at delivery: - Minimum current range of each channel
- Channel disconnected

Scope of delivery: - Module MICO 4.10
- Installation instructions
- Designation labels

Accessories: - Bridging set: (see bridging set) / - Designation labels: Art.No.: 996067

ON-Restart inputs: The Re-start – input is provided in double; it provides the user with the possibility of reconnecting load circuits disconnected by excess current by placing a defined signal at the input, e.g. 0V... 5V for "OFF" min.1s long and 10V - 30V for "ON" min. 20ms long. This does not apply to manually disconnected channels. They may only be activated through the button (2) at the module.

Summation message: The summary output message is motivated by a potential-free message output (terminals 13 and 14); it opens as soon as a channel has been disconnected or short-circuit released by overload. The message output is capable of switching 30 VAC/DC at 100mA and is suitable to drive SPS inputs.

Approvals:			
CE	C22.2 No. 14-05	UL2367	LISTED IND.CONT.EQ 61RM

	DNV GL – Location classes			
	Temperature	**B**	Humidity	**B**
	Vibration	**A**	EMC	**A**
	Enclosure	**A**		

Pin connections and terminal assignment:

Use 60/75°C copper conductors only or equivalent.

Terminals	**Function**	**Terminal range**	**Remarks**
Input +24V	Connection Input voltage +24V	Max. 16 mm² to AWG 6	
Input GND	Connection GND to supply the internal electronic	Max. 4 mm² to AWG 12	Notice: The 0V of the consumer must lead directly to the voltage supply through separate lines!
Output OUT 1…4	MICO outputs to be connected with the load circuit	min.1,5 mm² AWG 15 Max. 4 mm² to AWG 12	
ON	Remote activation (except function at manually disconnected channel [red])	Max. 2.5 mm² to AWG 12	
13, 14	Summation message contact (normally open contact)	Max. 2.5 mm² to AWG 12	

Displays:

Display	**State**	**Indication**
green	connected	- Function OK
red	disconnected	- Manually disconnected
green flashing	threshold	- Load above 90% of operating current
red flashing 1 Hz	disconnected	- Over current
red quickly flashing 5 Hz	defect	- Internal fault

Disconnecting characteristic:

Each current range is provided a separate disconnecting characteristic with a basic accuracy of 0...+20% – see diagram. The disconnecting time at short-circuit amounts to max. 5ms.

