MURR ELEKTRONIK
stay connected

Mico Pro PS 5-100-240/24

IN: 90 - 265VAC OUT: 24-28V/5ADC / Cover plate included (heavy duty)

Art.No.: 9000-41190-0000105
Weight: 0.440 kg
Country of origin: CZ
Model designation: Mico Pro PS 5-100-240/24

INPUT: 90...265 V AC
OUTPUT: 24...28 V DC
Current: 5 A
Build your own Mico Pro® online:
START

Mains failure bridging min.
min. 20 ms (115 V AC); min. 65 ms (230 V AC)

Link to Product

Illustration



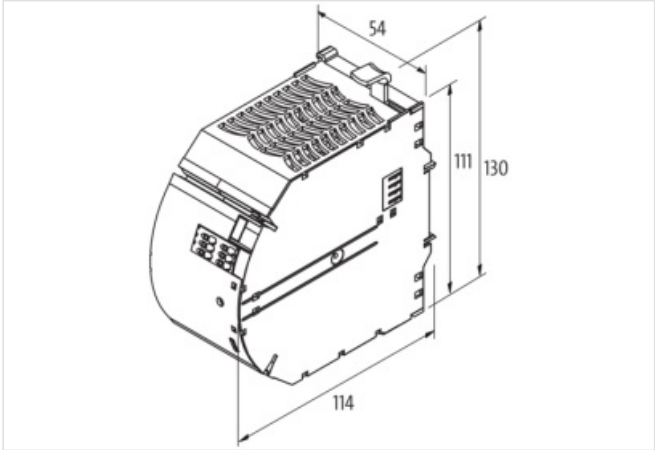

Product may differ from Image

Header

Material short text	Mico Pro PS 5-100-240/24

Commercial data

URL Webshop	https://shop.murrelektronik.com/9000-41190-0000105
GTIN	4048879695664
ECLASS-6.0	27141901
ECLASS-6.1	27049002
ECLASS-7.0	27049002
ECLASS-7.1	27049002
ECLASS-8.0	27049002
ECLASS-8.1	27049002
ECLASS-9.0	27040701
ECLASS-9.1	27040701
ECLASS-10.0.1	27040701
ECLASS-10.1	27040701

The information in this Product-PDF has been compiled with the utmost care.
Liability for the correctness completeness and topicality of the information is restricted to gross negligence. Version: 2026-01-15

MURR ELEKTRONIK
stay connected

ECLASS-11.0	27040701
ECLASS-11.1	27040701
ECLASS-12.0	27040701
ECLASS-13.0	27040701
ECLASS-14.0	27040701
ETIM-5.0	EC001440
ETIM-6.0	EC001440
ETIM-7.0	EC001440
ETIM-8.0	EC001440
customs tariff number	85044083
EAN	4048879695664
Packaging unit	1
Electrical data	
Security level	SELV
Parallel connection	No
Series connection	No
Electrical data | Supply	
Power frequency	50 ... 60 Hz
Electrical data | Input	
Input voltage AC min.	90 V
Input voltage AC max.	265 V
Nominal input voltage AC	115 V
Nominal current AC	1.1 A @ 115 V , 2.3 A @ 230 V
Inrush current max.	30 A
Power factor	115 V AC 230 V AC
Efficiency	89.4 % @ 115 V AC 90.8 % @ 230 V AC
Characteristic back-up fuse	Inertia
Fuse protection primary side internal	3,15 A
ON input voltage control inputs min.	9 V
ON input voltage control inputs max.	30 V
CTRL signal	ON/OFF
CTRL input voltage control inputs high min.	9 V
CTRL input voltage control inputs high max.	30 V
ON pulse length control inputs high min.	120 ms
Electrical data | Output	
Output voltage adjustable	Yes
Output voltage DC	24 V
Output voltage DC min.	24 V
Output voltage DC max.	28 V
Output current	5 A
Spikes (s-s) max.	230 mV
Ripple effective max.	15 mV
Switching voltage AC max.	30 V
Switching voltage DC max.	30 V
Installation | Connection	
Connection	Push-In spring clamp terminals
Device protection | Electrical	
Degree of protection (EN IEC 60529)	IP20
Overload protection output	Yes
Short-circuit protection output	Yes
Overtemperature protection output	Yes

The information in this Product-PDF has been compiled with the utmost care.
Liability for the correctness completeness and topicality of the information is restricted to gross negligence. Version: 2026-01-15

MURR ELEKTRONIK
stay connected

Mechanical data | Mounting data	
Height	130 mm
Width	54 mm
Depth	114 mm
Mounting method	geschnappt
Suitable for mounting type	Mounting rail TH35, (EN 60715)
Environmental characteristics | Climatic	
Operating temperature min.	-25 °C
Operating temperature max.	55 °C
Ambient temperature (storage, transport)	-40 °C
Relative humidity (operation)	5 %
Additional condition relative humidity	no condensation
Conformity	
Product standard	EN IEC 61010-2-201
EMC	EN 61000-3-2
Low Voltage Directive	EN 61204-3

The information in this Product-PDF has been compiled with the utmost care.
Liability for the correctness completeness and topicality of the information is restricted to gross negligence. Version: 2026-01-15