TR10-C RTD assembly with fabricated threaded protection tube

Modelcode type: TR10-C

Item number: 14734124

TR10-C RTD assembly with fabricated threaded protection tube	
Sensor	1xPt100, 3-wire
Accuracy class of the sensor	Class B, IEC 60751
Temperature range of selected class	-50...+250°C
Head / housing	KN4-A, Aluminum, screwed cover
Cable entry	Closing plug for transport
Thread size cable entry	M20 x 1.5
Transmitter	Without (terminal block)
Connection to neck tube	M24 x 1,5
Protection tube	Straight, thread, form 2G DIN 43772
Protection tube diameter	6 mm
Process connection	G 1/2 B
Protection tube material	Stainless steel 1.4571
Insertion length [A]	400 mm [U1]
Neck length [MH/N]	130 mm
Protection tube total length (spare) [L]	545 mm
Measuring insert length (spare) [l5]	562
Diameter measuring insert	3 mm
Sheath material measuring insert	Stainless steel 1.4571
Sealing	Without

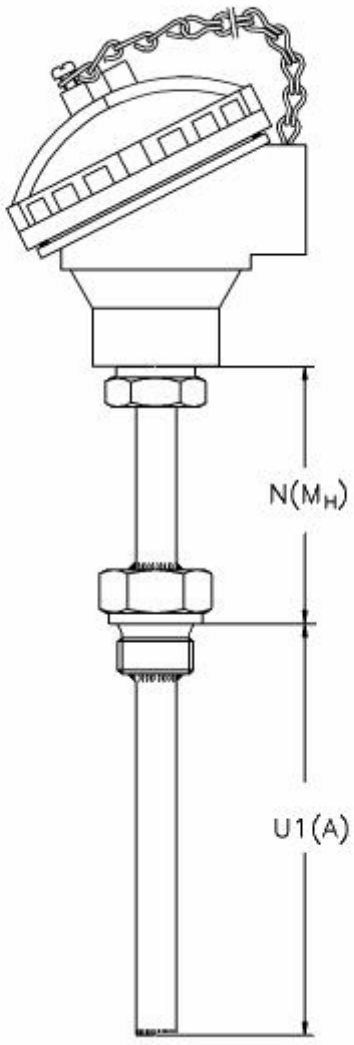

© Copyright by WIKA: Reproduction of this document is prohibited

WIKA Alexander Wiegand SE & Co. KG
Alexander-Wiegand-Str. 30
63911 Klingenberg
Germany

Phone: +49 9372 132/0
Fax Inland: +49 9372 132/406
E-Mail: info@wika.de
Internet: www.wika.de