Wireless command device
RF 97 RT SW868
Article no.: 1431953

Product features

- Thermoplastic enclosure
- Design to EN 50047
- sWave® wireless technology
- Power supply by Lithium battery (replaceable)
- Output signal can be individually configured at the receiver
- LBT - Listen before Talk Firmware
- Actuator: Push button RT
- Available soon

Dimensions

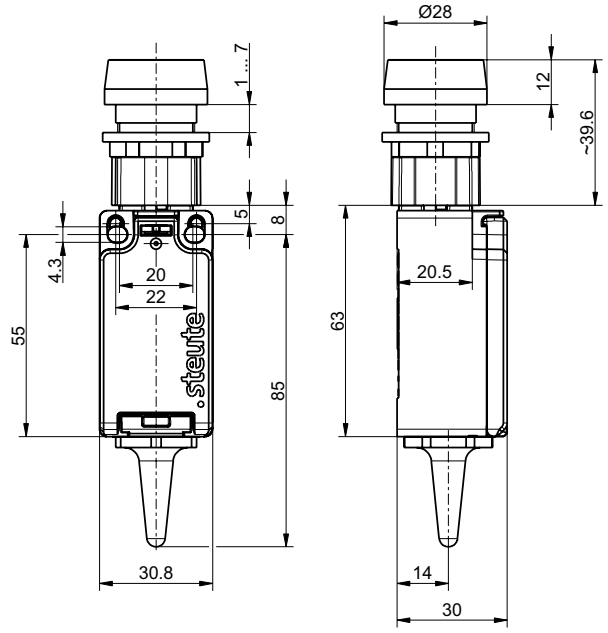

General technical data

Applied standards
EN IEC 60947-5-1, EN 300 220-2, EN 301 489-3, EN IEC 61000-6-2, EN IEC 62368-1, EN IEC 63000

Enclosure
thermoplastic, glass-fibre reinforced, shockproof, self-extinguishing UL 94 V-0, weathering resistant, UV stabilised

Degree of protection
device: IP65/IP67 (IEC/EN 60529)
actuator: IP65 (IEC/EN 60529)

Safety class
III

Ambient temperature
–25 °C ⋯ +70 °C

Storage and shipping temperature
–25 °C ⋯ +70 °C

Mechanical life
1 million operations

Operation cycles
max. 1800/h

Note
status signal – can be individually configured via radio receiver (delivery state: without status signal)
LBT – can be deactivated via radio receiver (e.g. in conjunction with repeaters)
transmission of battery voltage and switching condition
Go to our different wireless receivers to find corresponding how-to videos.

Wireless technology

General

Frequency
868.3 MHz (Europe)

Data rate
66 kbps

Errors and omissions excepted.

Wireless command device
RF 97 RT SW868
Article no.: 1431953

Wireless technology (contd.)

Channel bandwidth
400 kHz

Modulation type
2-FSK

Protocol
sWave®

Transmission power
< 25 mW

Wireless approvals
Europe: RED 2014/53/EU

Function

Telegram rate
max. 12000 telegrams with repetitions/h

Wireless range
max. 450 m outdoors, max. 40 m indoors

Collision avoidance procedure
LBT - Listen before Talk software

Note
status signal – can be individually configured via radio receiver (delivery state: without status signal)
LBT – can be deactivated via radio receiver (e.g. in conjunction with repeaters)
Go to our different wireless receivers to find corresponding how-to videos.

Voltage supply

Voltage source
lithium battery (replaceable)

System
$Li/SOCl_2$

Nominal voltage
3.6 V

Nominal capacity
1.2 Ah

Standby current
5 µA

Battery life
> 10 years

Errors and omissions excepted.