Wireless command device
RF BF 74 RS SW SW868-BATT LBT
Article no.: 1401512

Product features

- sWave® wireless technology
- No wiring and cable laying required
- Power supply by Lithium battery (replaceable)
- Easy programming of receiver
- Output signal can be individually configured at the receiver
- Actuator: Black push button RS SW
- Actuator made of plastic
- LBT - Listen before Talk Firmware

Notes
- The battery is included in delivery.

Dimensions

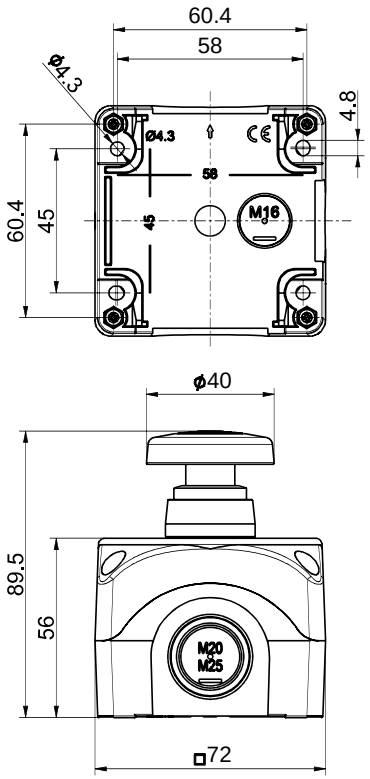

General technical data

Applied standards
EN 300 220-2, EN 301 489-3, EN 62479, EN 60947-5-1, EN 61000-6-2, EN 55011, EN 55032, EN IEC 63000

Enclosure
polycarbonate

Tightening torque
cover screws: approx. 1.6 Nm

Degree of protection
IP65 (IEC/EN 60529)

Safety class
III

Ambient temperature
–20 °C ⋯ +65 °C

Type of installation
screw connection

Mounting position
any

Sensor system
pressure actuator

Switching system
NO contact

Switching elements
internal micro switch

Mechanical life
> 1 million operations

Actuating time
min. 80 ms

Switching frequency
max. 5 Hz

Note
transmission of battery voltage and switching condition

Errors and omissions excepted.

Wireless command device
RF BF 74 RS SW SW868-BATT LBT
Article no.: 1401512

Wireless technology

General

Frequency
868.3 MHz (Europe)

Data rate
66 kbps

Channel bandwidth
350 kHz

Modulation type
2-FSK

Protocol
sWave®

Transmission power
< 25 mW

Wireless approvals
Europe: RED 2014/53/EU

Function

Telegram rate
max. 12000 telegrams with repetitions/h

Wireless range
max. 450 m outdoors, max. 40 m indoors

Note
status signal – can be individually configured via radio receiver (delivery state: without status signal)
LBT – can be deactivated via radio receiver (e.g. in conjunction with repeaters)
Go to our different wireless receivers to find corresponding how-to videos.

Voltage supply

Voltage source
lithium battery Tadiran SL-750/S (1/2 AA), replaceable

System
$Li/SOCl_2$

Nominal voltage
3.6 V

Nominal capacity
1.1 Ah

Standby current
5 µA

Battery life
depending on the switching frequency
1 s: ca. 0.6 years
10 s: ca. 4.3 years
100 s: >10 years*
*manufacturer´s specification of max. storage life

Errors and omissions excepted.