MORE THAN SENSORS

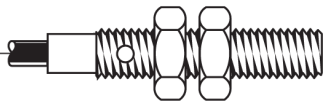

Part number: RFL000004 - Model: CT 42

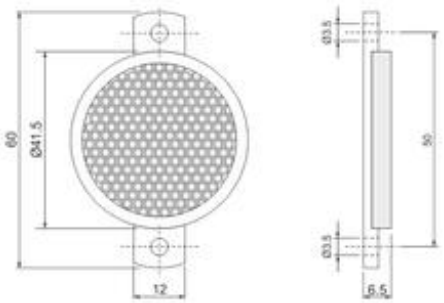

Dimension in mm

TECHNICAL CHARACTERISTICS

Reflective surface shape:		Circular
Reflective area:		1164 mm2
Observation at 0.2°:		5863 mcd/lx
Reflectivity:		5
Temperature limits:		-20 ÷ + 60 °C
Color:		White
Material:		Reflective side PMMA - Back side ABS
Fixing characteristics:		2 M3 screws
Weigth:		7.3 g

AECO S.r.l. 20065 Inzago (MI) Italy - Via G. Leopardi, 5 - Tel. +39 02 954381 - Fax +39 02 9548528
http://www.aecosensors.com - e-mail: aeco@aecosensors.com

MORE THAN SENSORS

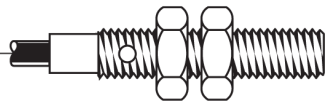

Part number: RFL000004 - Model: CT 42

AECO S.r.l. 20065 Inzago (MI) Italy - Via G. Leopardi, 5 - Tel. +39 02 954381 - Fax +39 02 9548528
http://www.aecosensors.com - e-mail: aeco@aecosensors.com