POSITION SENSORS
Inductive Sensors

Part number: **I30000087** Model: **SI30-CE15 PNP NO**

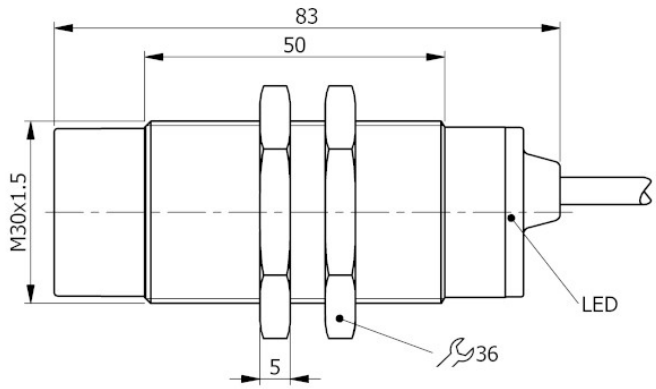

Dimension in mm

1. TECHNICAL CHARACTERISTICS

Electrical data		
Power supply type:		Direct current
Working voltage:	[V]	10 ÷ 30
Current consumption:	[mA]	< 15 mA @ 24Vdc
Protection class:		III
Reverse polarity protection:		Presente
Outputs		
Electrical design:		PNP
Function:		NO
Max voltage drop:	[V]	< 1.8
Max output current:	[mA]	200
Max switching frequency:	[Hz]	300
Short circuit protection:		Present
Overload protection:		Present
Detection zone		
Switching distance-Sn:	[mm]	15
Real sensing distance-Sr:	[mm]	15 ±10%
Operative distance-So:	[mm]	0 ÷ 12.15
Accuracy and Deviations		
Correction factor:		Stainless steel: 0.9 - Brass: 0.5 - Aluminium: 0.4 - Copper: 0.4
Hysteresis:	[%Sr]	< 10
Switching point drift:	[%Sr]	-10 ÷ +10
Repeatability:	[%Sn]	< 3
Environmental conditions		
Temperature limits:	[°C]	-25 ÷ +70
IP rating:		IP65-IP66-IP67

Display and control elements		
Display:		Output switching status - 1 x LED: Yellow
Mechanical data		
Housing:		Threded type
Thread designation:		M30x1.5
Dimensions:	[mm]	M30x1.5 - L=84
Materials:		Housing: Nickel-plated brass - Sensing area: PC red - Lock nuts: Nickel-plated brass
Mounting:		Not embeddable
Weigth:	[g]	220
Electrical connection		
Cable:		2 m - PVC/PVC - 3 x 0.35 mm²
Compliance to Standards / Directives		
Directives compliance:		2014/30/EU -Electromagnetic compatibility directive (EMC)
Standards compliance:		EN60947-5-2 - Product standard

2. NORME DI INSTALLAZIONE

WIRING DIAGRAM

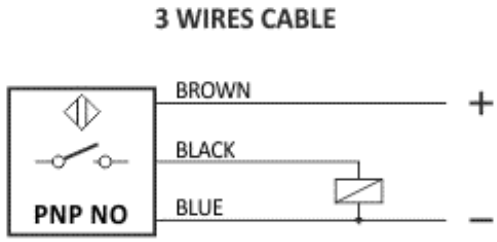

INSTRUCTIONS FOR CORRECT INSTALLATION

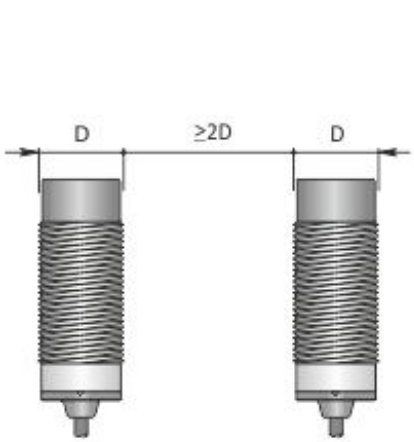

Side by side mounting

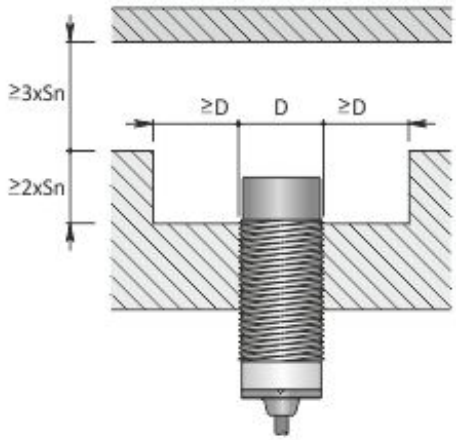

Non flush mounting