# Inductive sensor

# NBN25-30GM70-E2

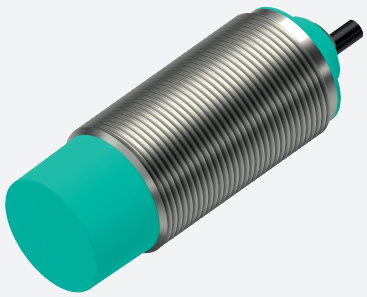

- 25 mm non-flush
- Increased operating distance
- Extended temperature range -40 ... +85 °C
- Extended operating voltage range
- Flexible use with versatile mounting opportunities

## Dimensions

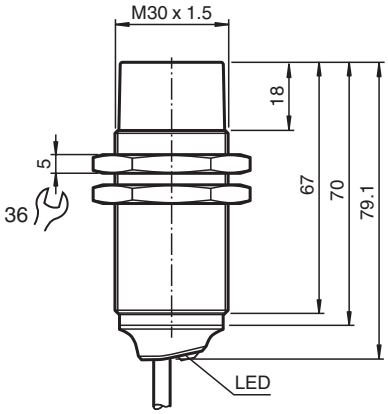


## Technical Data

| | | |
|---|---|---|
| **General specifications** | | |
| Switching function | | Normally open (NO) |
| Output type | | PNP |
| Rated operating distance | $s_n$ | 25 mm |
| Installation | | non-flush |
| Output polarity | | DC |
| Assured operating distance | $s_a$ | 0 ... 20.25 mm |
| Actuating element | | mild steel, e. g. 1.0037, SR235JR (formerly St37-2)<br>75 mm x 75 mm x 1 mm |
| Reduction factor $r_{Al}$ | | 0.45 |
| Reduction factor $r_{Cu}$ | | 0.42 |
| Reduction factor $r_{304}$ | | 0.7 |
| Reduction factor $r_{Brass}$ | | 0.5 |
| Output type | | 3-wire |
| **Nominal ratings** | | |
| Operating voltage | $U_B$ | 5 ... 36 V |
| Switching frequency | f | 0 ... 400 Hz |
| Hysteresis | H | typ. 5 % |
| Reverse polarity protection | | reverse polarity protected |

Release date: 2024-05-28 Date of issue: 2024-06-05 Filename: 326161-0193_eng.pdf

## Technical Data

| | | |
|---|---|---|
| Short-circuit protection | | pulsing |
| Voltage drop | $U_d$ | ≤ 1 V |
| Operating current | $I_L$ | 0 ... 200 mA |
| Off-state current | $I_r$ | max. 20 µA |
| No-load supply current | $I_0$ | ≤ 10 mA |
| Time delay before availability | $t_v$ | ≤ 10 ms |
| Switching state indicator | | LED, yellow |
| **Functional safety related parameters** | | |
| $MTTF_d$ | | 1707 a |
| Mission Time ($T_M$) | | 20 a |
| Diagnostic Coverage (DC) | | 0 % |
| **Conformity** | | |
| PWIS conformity | | VDMA 24364-C1/T100°C-W |
| **Compliance with standards and directives** | | |
| Standard conformity | | |
| Standards | | EN IEC 60947-5-2 |
| **Approvals and certificates** | | |
| Protection class | | II |
| Rated insulation voltage | $U_i$ | 36 V |
| Rated impulse withstand voltage | $U_{imp}$ | 500 V |
| UL approval | | cULus Listed, General Purpose, Class 2 Power Source |
| CCC approval | | CCC approval / marking not required for products rated ≤36 V |
| **Ambient conditions** | | |
| Ambient temperature | | -40 ... 85 °C (-40 ... 185 °F) |
| Storage temperature | | -40 ... 85 °C (-40 ... 185 °F) |
| **Mechanical specifications** | | |
| Connection type | | cable |
| Housing material | | brass , white bronze coated |
| Sensing face | | PBT , green |
| Degree of protection | | IP65 / IP66 / IP67 / IP68 |
| Cable | | |
| Wire end ferrules | | yes |
| Cable diameter | | 4.3 mm ± 0.15 mm |
| Bending radius | | > 10 x cable diameter |
| Material | | PVC |
| Color | | black |
| Number of cores | | 3 |
| Core cross section | | 0.34 $mm^2$ |
| Length | L | 2 m |
| Mass | | 213 g |
| Dimensions | | |
| Length | | 79 mm |
| Diameter | | 30 mm |
| Mounting | | with nuts, M30 |
| Tightening torque | | 0 ... 30 Nm |
| **General information** | | |
| Scope of delivery | | 2 self locking nuts in scope of delivery |

Release date: 2024-05-28 Date of issue: 2024-06-05 Filename: 326161-0193_eng.pdf

## Connection

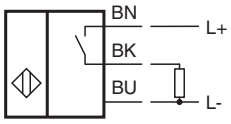


Release date: 2024-05-28 Date of issue: 2024-06-05 Filename: 326161-0193_eng.pdf