

Inductive sensor

NBN8-18GM50-E2

- Use in harsh environments
- High shock resistance
- Extended temperature range -40 ... +85 °C
- Extended operating voltage range
- Extremely high switching frequency

Dimensions

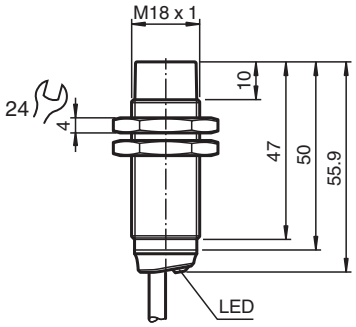

Technical Data

General specifications		
Switching function		Normally open (NO)
Output type		PNP
Rated operating distance	s_n	8 mm
Installation		non-flush
Output polarity		DC
Assured operating distance	s_a	0 ... 6.48 mm
Actuating element		mild steel, e. g. 1.0037, SR235JR (formerly St37-2) 24 mm x 24 mm x 1 mm
Reduction factor r_{Al}		0.44
Reduction factor r_{Cu}		0.42
Reduction factor r_{304}		0.76
Reduction factor r_{Brass}		0.52
Output type		3-wire
Nominal ratings		
Operating voltage	U_B	6 ... 36 V
Switching frequency	f	0 ... 1650 Hz
Hysteresis	H	typ. 5 %
Reverse polarity protection		reverse polarity protected
Short-circuit protection		pulsing
Voltage drop	U_d	≤ 1 V
Operating current	I_L	0 ... 200 mA

Release date: 2026-03-11 Date of issue: 2026-03-11 Filename: 326161-0121_eng.pdf

Technical Data

Off-state current	I_r	max. 20 µA
No-load supply current	I_0	≤ 10 mA
Time delay before availability	t_v	≤ 10 ms
Switching state indicator		LED, yellow
Safety-relevant product characteristics		
$MTTF_d$		1598 a
Mission Time (T_M)		20 a
Diagnostic Coverage (DC)		0 %
Conformity		
PWIS conformity		VDMA 24364-C1/T100°C-W
Compliance with standards and directives		
Standard conformity		
Standards		EN IEC 60947-5-2
Approvals and certificates		
Protection class		II
Rated insulation voltage	U_i	36 V
Rated impulse withstand voltage	U_{imp}	500 V
UL approval		cULus Listed Load Type: General Purpose Circuitry: Class 2 Power Source Enclosure Type Rating: Type 1 Supply/Switching Voltage: 36 V DC Output Switching Current: 200 mA
CCC approval		CCC approval / marking not required for products rated ≤36 V
Marine approval		DNVGL TAA00003AK
Ambient conditions		
Ambient temperature		-40 ... 85 °C (-40 ... 185 °F)
Storage temperature		-40 ... 85 °C (-40 ... 185 °F)
Mechanical specifications		
Connection type		cable
Housing material		brass , white bronze coated
Sensing face		PBT , green
Degree of protection		IP65 / IP66 / IP67 / IP68 / IP69
Cable		
Wire end ferrules		yes
Cable diameter		4.3 mm ± 0.15 mm
Bending radius		> 10 x cable diameter
Material		PVC
Color		black
Number of cores		3
Core cross section		0.34 mm^2
Length	L	2 m
Mass		110 g
Dimensions		
Length		56 mm
Diameter		18 mm
Mounting		with nuts, M18
Tightening torque		≤ 30 Nm
General information		
Scope of delivery		2 self locking nuts in scope of delivery

Release date: 2026-03-11 Date of issue: 2026-03-11 Filename: 326161-0121_eng.pdf

Connection Assignment

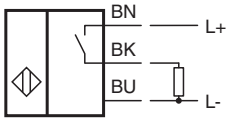

Characteristic Curve

Actuation by radial approach (standard target)

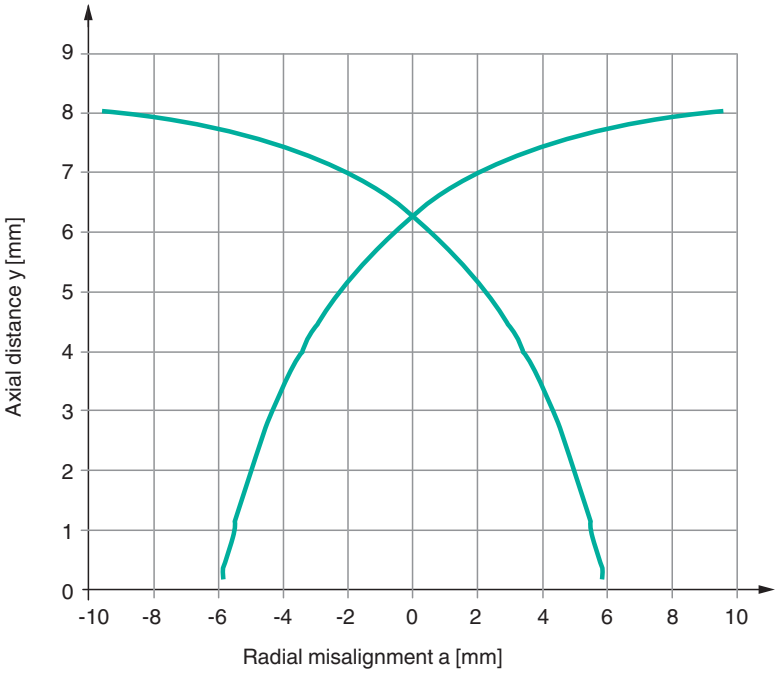

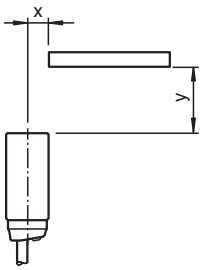

Switching distance depending on the actuating element

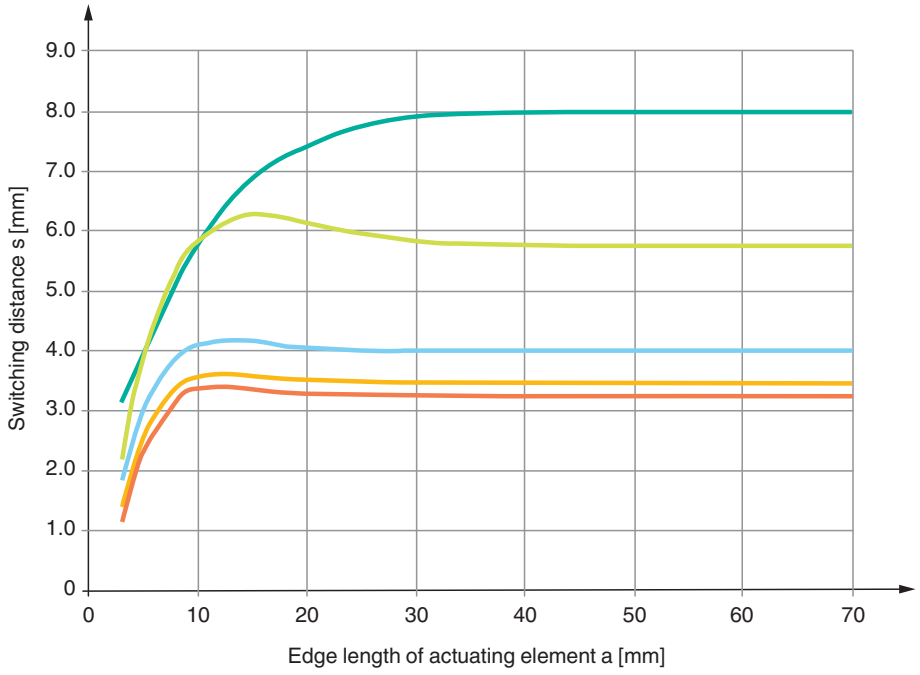

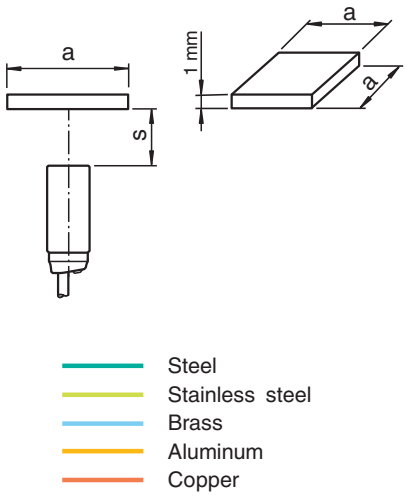

Release date: 2026-03-11 Date of issue: 2026-03-11 Filename: 326161-0121_eng.pdf