

Function rotary switches

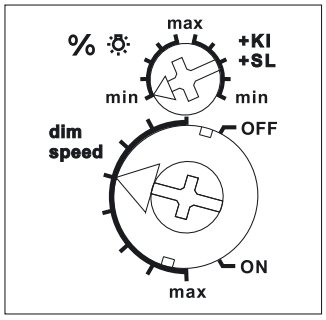

Standard setting ex works.

Typical connections

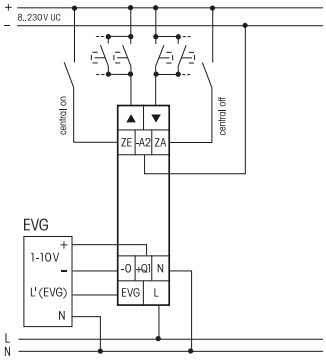

with direction pushbutton

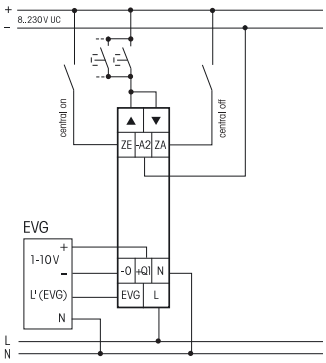

with universal pushbutton

Manuals and documents in further languages:
https://eltako.com/redirect/SDS12*1-10V

Technical data page 9-23.
Housing for operating instructions GBA14 page 1-48 chapter 1.

SDS12/1-10V

1 NO contact not potential free 600 VA and 1-10 V control output 40 mA. Only 0.5 watt standby loss. With adjustable minimum brightness and dimming speed. With switching operation for children's rooms and snooze function.

Modular device for DIN-EN 60715 TH35 rail mounting.
1 modul = 18 mm wide, 58 mm deep.
Zero passage switching with soft ON and soft OFF to protect lamps.
Also adapted for LED driver with 1-10 V passive interface, without voltage source up to 0.6 mA, above this value an additional voltage source is necessary.
Universal control voltage 8 to 230 V UC, local and central on/off with same potential.
Supply voltage 230 V electrically isolated.
State-of-the-art hybrid technology combines advantages of nonwearing electronic control with high capacity of special relays.
The brightness level is stored on switch-off (Memory).
In case of a power failure the switch position and the brightness stage are stored and may be switched on when the power supply is restored.
The minimum brightness (fully dimmed) is adjustable with the upper % rotary switch.
At the same time, you define whether the children's room function and the snooze function are active (+KI +SL).
The dimming speed is adjustable **using the lower dimming speed rotary switch.**
The load is switched on and off by a bistable relay at output EVG (electronic ballast units). Switching capacity for fluorescent lamps or LV halogen lamps with electronic ballast units 600 VA.
By using a bistable relay coil power loss and heating is avoided even in the on mode. After installation, wait for short automatic synchronisation before the switched consumer is connected to the mains.
Either direction pushbuttons can be connected to ▲ ▼ or these terminals are bridged and a push-button is connected as universal pushbutton. As direction pushbutton ▲ is 'switch on and dim up' and ▼ is 'switch off and dim down'. A double click at ▲ triggers the automatic updimming until full brightness with dim speed. A double click at ▼ triggers the snooze function. The children's room function is realized with the pushbutton at ▲.
As a universal pushbutton, change the direction by briefly releasing the pushbutton.
Switching operation for children's rooms KI (universal pushbutton or direction pushbutton ▲):
If the light is switched on by holding down the pushbutton, it starts at the lowest brightness level after approx. 1 second and dims up slowly as long as the pushbutton is held down without modifying the last stored brightness level.
Snooze function SL (universal pushbutton or direction pushbutton ▼): With a double impulse the lighting is dimmed down from the current dimming position to the minimum brightness level and switched off. The current dimming position as well as the adjustable minimum brightness level determine the dimming time (max. = 60 minutes) which can be reduced as required. It can be switched off at any time by short-time control commands during the lighting is dimmed down. Holding down the pushbutton during the dimming down process dims up and stops the snooze function.

SDS12/1-10V	1-10 V control dimmer switch for electronic ballast units, 1 NO contact 600 VA	**Art. No. 21100800**	

Recommended retail prices excluding VAT.

UNIVERSAL DIMMER SWITCHES, CAPACITY ENHANCERS AND 1-10 V CONTROLLERS

Type	ELD61[a)]	SDS12 SUD12	SDS61	MOD12D
Spacing of control connections/load	6 mm	6 mm	3 mm	6 mm
Incandescent and halogen lamps 230 V (R)	–	–	–	–
Inductive transformers (L)[2)3)]	–	–	–	–
Motor (L)	–	–	–	up to 300 W [7)]
Capacative transformers (C)[3)8)]	–	–	–	–
Dimmable 230 V LED lamps[5)6)9)]	–	–	–	–
Dimmable LED lamps 12-36 V DC	ELD61: 7,5 A	–	–	–
1-10 V EVG	–	40 mA 600 VA	40 mA 600 VA	–
Maximum conductor cross-section (3-fold terminal)	4 mm^2	6 mm^2 (4 mm^2)	4 mm^2	6 mm^2 (4 mm^2)
Two conductors of same crosssection (3-fold terminal)	1,5 mm^2	2.5 mm^2 (1.5 mm^2)	1.5 mm^2	2.5 mm^2 (1.5 mm^2)
Screw head	slotted/crosshead	slotted/crosshead, pozidriv	slotted/crosshead	slotted/crosshead, pozidriv
Type of enclosure/terminals	IP30/IP20	IP50/IP20	IP30/IP20	IP50/IP20
Time on	100%	100%	100%	100%
Max./min. temperature at mounting location [4)]	+50°C/-20°C	+50°C/-20°C	+50°C/-20°C	+50°C/-20°C
Standby loss (active power)	0.1 W	0.5 W	0.5 W	0.3 W
Control voltage	12..230 V UC	8..230 V UC	230 V	12..230 V UC
Glow lamp current	–	–	–	–
Control current 230 V-control input (<5 s)	–	–	0.5 mA	–
Control current universal control voltage all control voltages (<5 s) 8/12/24/230 V (<5 s)	– 2/3/7/4(100) mA	– 3/5/10/4(100)mA	– –	2/3/8/5(100)mA –
Control current central 8/12/24/230 V (<5 s)	–	3/5/10/4(100)mA	–	2/3/8/5(100)mA
Max. parallel capacitance (approx. length) of single control lead at 230 V AC	0.3 µF (1000m)	0.3 µF (1000 m)	0.06 µF (200 m)	0.9 µF (3000 m)
Max. parallel capacitance (approx. length) of central control lead at 230 V AC	–	0.3 µF (1000 m)	–	0.9 µF (3000 m)

* EVG = electronic ballast units; KVG = conventional ballast units [a)] Secondary cable length with a maximum of 2 m. [1)] For loads exceeding half the respective rated load, a ventilation distance of ½ module must be maintained from adjacent devices. For the EUD61, the switching capacity also depends on the ventilation conditions. [2)] Per dimmer or capacity enhancer it is only allowed to use max. 2 inductive (wound) transformers of the same type, **furthermore no-load operation on the secondary part is not permitted. The dimmer might be destroyed.** Therefore do not permit load breaking on the secondary part. Operation in parallel of inductive (wound) and capacative (electronic) transformers is not permitted! **[3)] When calculating the load a loss of 20% for inductive (wound) transformers and a loss of 5% for capacitive (electronic) transformers must be considered in addition to the lamp load.** [4)] Affects the max. switching capacity. [5)] In the settings LED and ESL no wound (inductive) transformer must be dimmed. [6)] Increase of capacity for dimmable 230 V LED lamps and dimmable energy saving lamps ESL see page 9-10. [7)] Only 1 fan motor may be connected. [8)] For LED and 12 V halogen lamps. [9)] Usually applies to 230 V LED lamps. Different lamp electronics may result in restricted dimming areas, on/off problems and a limited maximum number of lamps (up to 10 units), especially if the connected load is very low (e.g. with 5 W LEDs). The comfort positions of the dimmer switches optimize the dimming range, which, however, only gives a maximum power up to 100 W. No inductive (wound) transformers may be dimmed in these comfort positions.

According to DIN VDE 0100-443 and DIN VDE 0100-534, the installation of a surge arrester (SPD) is mandatory.
ELTAKO offers suitable, standard-compliant surge arresters of types 1, 2, and 3 – see Chapter 8, "Surge Arresters."

Compliance with: EN 61000-6-3, EN 61000-6-1 and EN 60 669