GB CE

28 305 015 - **2**

Three-phase energy meter DSZ15WD-3x5A with display and MID approval

Only skilled electricians may install this electrical equipment otherwise there is the risk of fire or electric shock!

Temperature at mounting location: -40°C up to +70°C.
Storage temperature: -40°C up to +70°C.
Relative humidity: annual average value <75%.

CT operated energy meter with settable CT ratio and MID.
Maximum current 3x5 A. Standby loss 0.5 watt per path only.

Modulair device for DIN-EN 60715 TH35 rail mounting in distribution cabinets with IP51 protection class. 4 modules = 70 mm wide and 58 mm deep.

Accuracy class B (1%). With S0 interface as standard.

This three-phase energy meter measures active energy by means of the current between input and output. The internal power consumption of 0.5 watt active power per path is neither metered nor indicated.

1, 2 or 3 phase conductors with max. currents up to 5 A can be connected.
The inrush current is 10 mA. The N terminal must always be connected.

The consumption value is stored in non-volatile memory and is displayed again immediately after a power failure.

The 7 segment LC display is also legible twice within a period of 2 weeks without power supply.

Power consumption is shown by a bar flashing at a rate of 10 times per kWh.

On the right next to the display are the keys MODE and SELECT. Press them to scroll through the menu. First the **background lighting** switches on. The display then shows the total active energy, the active energy of the resettable memory as well as the instantaneous values of consumption, voltage and current per phase.

The CT ratio can also be set. It is set to 5:5 at the factory and blocked with a bridge over the terminals which are marked with 'JUMPER'. To adjust the CT ratio to the installed transformer, remove the bridge and reset the energy meter according to the the display guide, right on this manual. Then block it again with the bridge. Adjustable current transformer ratios: 5:5, 50:5, 100:5, 150:5, 200:5, 250:5, 300:5, 400:5, 500:5, 600:5, 750:5, 1000:5, 1250:5 and 1500:5.

Error message (false)
When the phase conductor is missing or the current direction is wrong 'false' and the corresponding phase conductor are indicated on the display.

Important! Before working on the current transformers disconnect the voltage paths of the energy meters.

Typical connection:
4-wire-connection 3x230/400 V

Connect the current transformer terminals on the secondary part to the phase cunductors which are metered. These connections for the voltage supply of the energy meters must be secured according to the local installation regulations.

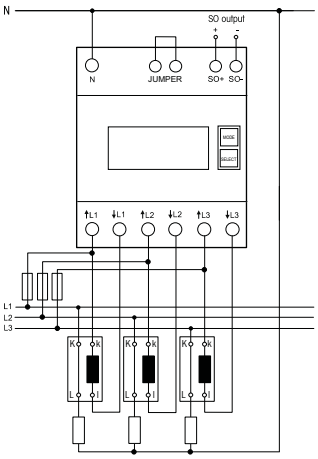

Menu guidance

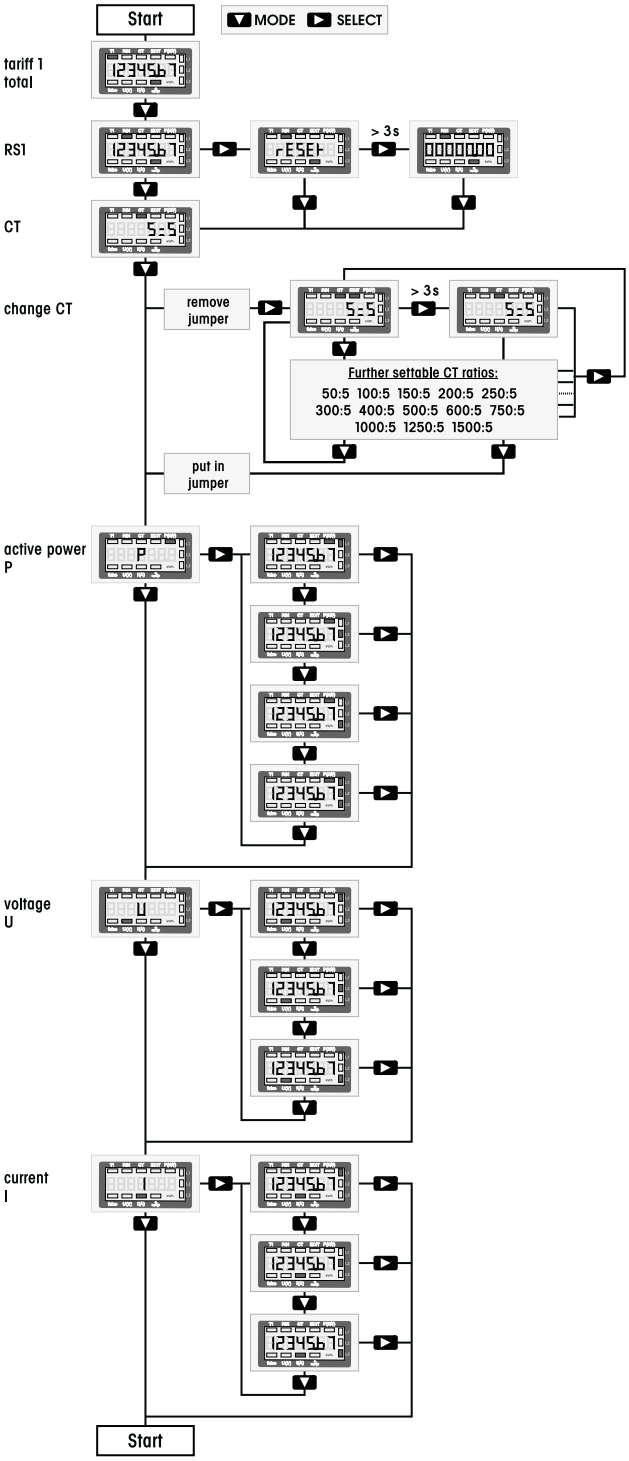

Technical data

Rated voltage, extended range	3x230/400 V, 50 Hz, -20%/+15%
Reference current I_{ref} (Limiting current I_{max})	3x0.05 - 5(6) A
Internal consumption active power	0.5 W per path
Display	LC display 7 digits, therefrom 1 digit after the decimal point
Accuracy class ±1%	B
Inrush current according to accuracy class B	10 mA
Operating temperature	-40/+70°C
Interface	Pulse interface S0 according to DIN EN 62053-31, potential free by opto-coupler, max. 30 V DC/20 mA and min. 5 V DC, impedance 100 ohms, pulse length 30 ms, 10 Imp./kWh
Terminal cover sealable	Terminal cover claps
Protection degree	IP50 for mounting in distribution cabines with protection class IP51
Maximum conductor cross section [1]	N and L terminals 16 mm2, S0 terminals and jumper terminals 6 mm2
Recommended torque [2]	L- and N terminals 1,5 Nm (max. 2,0 Nm) S0 terminals and jumper terminals 0,8 m (max. 1,2 Nm)
EC type examination certificate	0120/SGS0314
The energy meter is used indoors.	
Mechanical environmental conditions	class M1
Electromagnetic environmental conditions	class E2

[1] The carrying capacity of cables and wires is defined in DIN VDE 0298-4.

[2] The torques for screw terminals are mentioned in DIN EN 60999-1.
To avoid damages at the energy meter, the recommended torque values for each terminal must not be exceeded!

EC DECLARATION OF CONFORMITY

Product	**Three-phase energy meter with MID approval** CT operated energy meter with settable CT ratio
Type designation	**DSZ15WD-3x5A**
EC-type examination certificate	0120/SGS0314

The manufacturer herewith declares, on his own responsibility that the designated products which this certificate refers to, are in accordance with the following harmonized standards or normative documents as well as with the following Directives of the European Parliament and of the Council (relevant version):

DIN EN 50470	part 1: 2019-08 and part 3: 2020-03 (electronic meters)
2014 / 32 / EU	measuring instruments
2014 / 30 / EU	electromagnetic compatibility
2011 / 65 / EU	restriction of the use of certain hazardous substances (RoHS Directive)

The designated products are placed on the market by ELTAKO GmbH ,
Hofener Straße 54 , 70736 Fellbach, Germany.

Notified body	SGS Fimko OY, No. 0598 Takomotie 8, FI-00380 Helsinki, Finland
Manufacturer	Shenzhen Chuangren Technology Co. Ltd. Building 33, No.3 Industrial Area, Mashantou, Gongming Street, New Guangming District, Shenzhen City, Guangdong Province, 518106, China
Place, Date	Shenzhen, 25 February 2021
Signature	

This declaration proves the compliance with the above-mentioned EC Directives but it does not include any assurance of properties.
Security advices of the provided product information have to be noticed.

Manuals and documents in further languages:

https://eltako.com/redirect/DSZ15WD-3*5A_MID

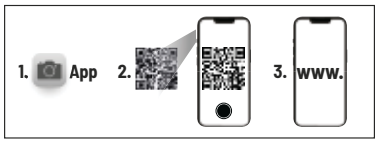

Must be kept for later use!
We recommend the housing for operating instructions GBA14.

ELTAKO GmbH
D-70736 Fellbach
Technical Support English:
☎ +49 711 943 500 25
✉ technical-support@eltako.de
eltako.com

16/2025 Subject to change without notice.