GB CE

28 065 615 - **1**

Single-phase energy meter WSZ15D-65A with display, with MID approval

Only skilled electricians may install this electrical equipment otherwise there is the risk of fire or electric shock!

Temperature at mounting location: -40°C up to +70°C.
Storage temperature: -40°C up to +70°C.
Relative humidity: annual average value <75%.

Maximum current 65 A. Standby loss 0.4 watt only.

Modular device for DIN-EN 60715 TH35 rail mounting.
1 module = 18 mm wide and 58 mm deep.

Accuracy class B (1%). With S0 interface as standard.

This single-phase energy meter measures active energy by means of the current between input and output. The internal power consumption of 0.4 watt active power is neither metered nor indicated.

1 phase conductor with a max. current up to 65 A can be connected.
The start current is 40 mA.

If the anticipated load exceeds 50%, maintain an air gap of ½ pitch unit to the devices mounted adjacently. If necessary, use spacer DS12.

Two N terminals for secure cross wiring of several counters.

The consumption value is stored in non-volatile memory and is displayed again immediately after a power failure.

The 7 segment LC display is also legible twice within a period of 2 weeks without power supply. Press the button.

Power consumption is shown by a bar flashing at a rate of 1000 times per kWh.

The meter terminals must be protected against tampering by installation in a sealable distribution cabinet.

Error message

In case of a connection error, the background lighting of the display flashes.

When the display is running, it shows the total active energy and the display bars are in the kWh position.

Press the button under the display to switch on the **background lighting.** Then you can browse through the menu. The bar moves to the current display: the cumulative power of the resettable memory RS (kWh), the current power P (kW), the current voltage U (V) and the present current I (A) will be displayed successively. In the end it will be browsed to the active energy display (kWh). The program automatically returns back to normal display (kWh) 20 seconds after pressing the button and the background lighting will be swiched off.

The memory RS is reset by pressing the button for longer than 3 seconds while the memory is displayed. Then confirm the message 'reset' by pressing the button again for 3 seconds.

Typical connection

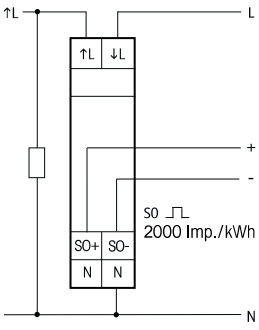

Menu guidance WSZ15D

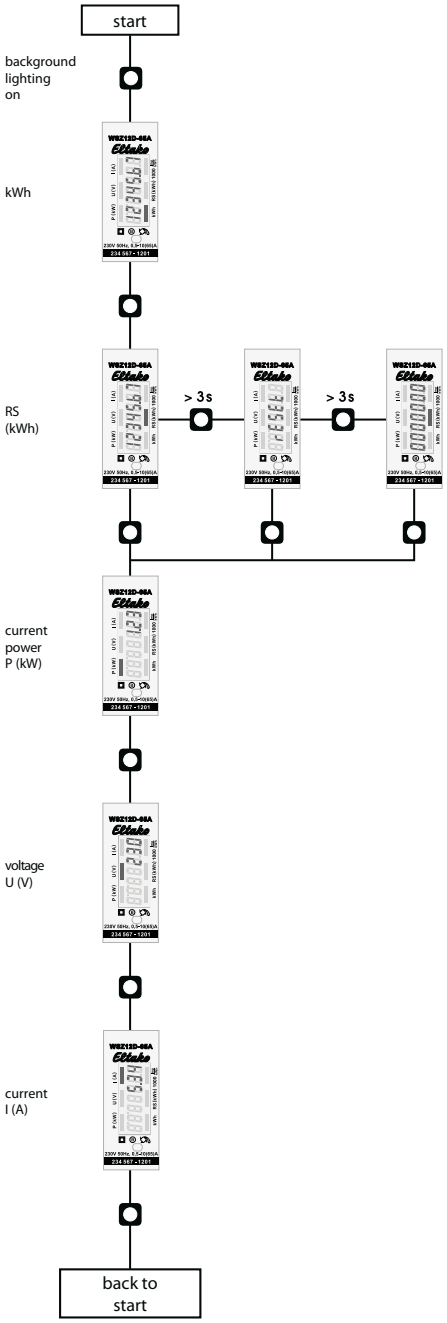

Manuals and documents in further languages:

https://eltako.com/redirect/WSZ15D-65A_MID

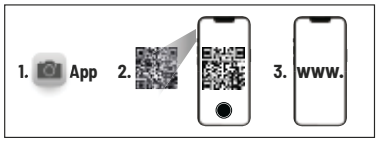

Technical data

Rated voltage, extended range	230 V, 50 Hz, -20%/+15%
Reference current I_{ref} ((Limiting current I_{max})	0.5 - 10(65) A
Internal consumption active power	0.4 W
Display	LC display 7 digits, therefrom 1 or 2 digits after the decimal point
Accuracy class ±1%	B
Inrush current according to accuracy class B	40 mA
Ambient temperature limits	-40/+70°C
Interface	potential free by opto-coupler, max. 30 V DC/20 mA and min. 5 V DC. S0: pulse output described in DIN EN 62053-31, impedance 100 Ohm, pulse length 30 ms, 2000 Imp./kWh
Protection degree	IP50 for mounting in distribution cabines with protection class IP51
Maximum conductor cross section [1]	L terminals 16 mm² N and S0 terminals 6 mm²
Recommended torque [2]	
L terminals	1,5 Nm (max. 2,0 Nm)
N and S0 terminals	0,8 Nm (max. 1,2 Nm)
EC type examination certificate	0120/SGS0272
The energy meter is used indoors.	
Mechanical environmental conditions	class M1
Electromagnetic environmental conditions class	class E2

[1] The carrying capacity of cables and wires is defined in DIN VDE 0298-4.

[2] The torques for screw terminals are mentioned in DIN EN 60999-1.
To avoid damages at the energy meter, the recommended torque values for each terminal must not be exceeded!

EC DECLARATION OF CONFORMITY

Product	**Single-phase energy meter with MID approval**
Type designation	**WSZ15D-65A**
EC-type examination certificate	0120/SGS0272

The manufacturer herewith declares, on his own responsibility that the designated products which this certificate refers to, are in accordance with the following harmonized standards or normative documents as well as with the following Directives of the European Parliament and of the Council (relevant version):

DIN EN 50470	part 1: 2019-08 and part 3: 2020-03 (electronic meters)
2014 / 32 / EU	measuring instruments
2014 / 30 / EU	electromagnetic compatibility
2011 / 65 / EU	restriction of the use of certain hazardous substances (RoHS Directive)

The designated products are placed on the market by ELTAKO GmbH , Hofener Straße 54 , 70736 Fellbach, Germany.

Notified body	SGS Fimko OY, No. 0598 Takomotie 8, FI-00380 Helsinki, Finland
Manufacturer	Shenzhen Chuangren Technology Co. Ltd. Building 33, No.3 Industrial Area, Mashantou, Gongming Street, New Guangming District, Shenzhen City, Guangdong Province, 518106, China
Place, Date	Shenzhen, 25 February 2021
Signature	

This declaration proves the compliance with the above-mentioned EC Directives but it does not include any assurance of properties.
Security advices of the provided product information have to be noticed.

Must be kept for later use!
We recommend the housing for operating instructions GBA14.

ELTAKO GmbH
D-70736 Fellbach
Technical Support English:
☎ +49 711 94350025
✉ technical-support@eltako.de
eltako.com

16/2025 Subject to change without notice.