


# AR12DX-230V

**1 CO contact potential free. NO contact: 16 A/250 V AC, 230 V LED lamps up to 200 W, incandescent lamp load 2300 W. NC contact: 10 A/250 V AC, 230 V LED lamps up to 200 W, incandescent lamp load 2300 W. Standby loss 0.4 watt only.**

Modular device for DIN 60715 TH35 rail mounting. 1 module = 18 mm wide, 58 mm deep.
**With the patented ELTAKO Duplex technology (DX) the normally potential-free contacts can still switch in zero passage when switching 230 V AC 50 Hz and therefore drastically reduce wear. Simply connect the neutral conductor to the terminal (N) and L to 1(L) for this. This gives an additional standby consumption of only 0.1 watt.**
If the contact is used for controlling switching devices which do not perform zero passage switching themselves, (N) should not be connected because the additional closing delay otherwise causes the opposite effect.
With an internal toroidal-core current transformer the single phase AC current flowing through a consumer V1 of 0.1 A up to max. 32 A is compared to the setpoint. When the latter is exceeded a relay switches off a consumer V2 connected to 2 within 0.5 seconds or switches on a consumer V3 connected to 3.
Adjustment accuracy ±5%. From 25 A the relay always switches on.
State-of-the-art hybrid technology combines advantages of nonwearing electronic control with high capacity of special relays.
**The basis of current A** will be set with the lower rotary switch **A.**
The following basic values can be selected: 0.1 A, 0.3 A, 0.6 A, 0.9 A, 1.5 A, 1.9 A, 3.0 A and 3.2 A.
**The multiplier xA** will be set with the middle rotary switch **xA** and offers values between 1 and 10. So currents starting from 0.1 A (basis of current 0.1 A and multiplier 1) can be set.
**OFF delay RV** can be set with the upper rotary switch **RV** between 0 and 120 secs. The red LED flashes while the set RV time elapses.
The hysteresis is defined as approx. 25%.
Status indication by LED.
The measuring input M1-M2 is electrically isolated from power supply L-N and make contact 1(L)-2/3.
Reference values larger than 32 A can be adapted by an external measuring transformer.

### Function rotary switches

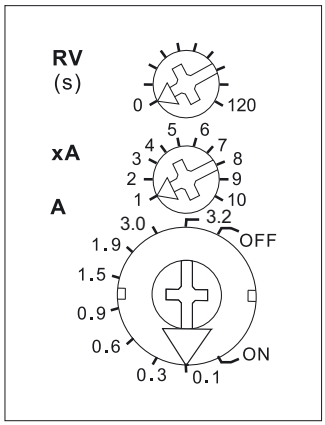


Standard setting ex factory.

### Typical connection

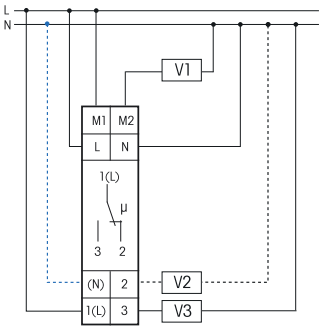


If (N) is connected, the zero passage switching is active.

**Manuals and documents in further languages:**
https://eltako.com/redirect/AR12DX-230V

*Technical data page 14-9.*
*Housing for operating instructions GBA14 page 1-48 chapter 1.*

| | | | |
|---|---|---|---|
| **AR12DX-230V** | Current relay, 1 CO contact 16 A | **Art. No. 22001130** | |