GB CE

22 001 130 - **2**

Eltako

Current relay
AR12DX-230V

Only skilled electricians may install this electrical equipment otherwise there is the risk of fire or electric shock!

Temperature at mounting location:
-20°C up to +50°C.
Storage temperature: -25°C up to +70°C.
Relative humidity:
annual average value <75%.

valid for devices from production week 31/24 (see bottom side of housing)

1 CO contact potential free.
NO contact: 16 A/250 V AC, 230 V LED lamps up to 200 W, incandescent lamp load 2300 W.
NC contact: 10 A/250 V AC, 230 V LED lamps up to 200 W, incandescent lamp load 2300 W.
Standby loss 0.4 watt only.

Modular device for DIN-EN 60715 TH35 rail mounting. 1 module = 18 mm wide, 58 mm deep.

With the Eltako-Duplex technology (DX) the normally potential-free contacts can still switch in zero passage when switching 230 V AC 50 Hz and therefore drastically reduce wear. Simply connect the neutral conductor to the terminal (N) and L to 1 (L) for this. This gives an additional standby consumption of only 0.1 Watt.

If the contact is used for controlling switching devices which do not perform zero passage switching themselves, (N) should not be connected because the additional closing delay otherwise causes the opposite effect.

With an internal toroidal-core current transformer the single phase AC current flowing through a consumer V1 of 0.1 A up to max. 32 A is compared to the setpoint. When the latter is exceeded a relay switches off a consumer V2 connected to 2 within 0.5 seconds or switches on a consumer V3 connected to 3.

Adjustment accuracy ±5%.

From 25 A the relay always switches on.

State-of-the-art hybrid technology combines advantages of nonwearing electronic control with high capacity of special relays.

Function rotary switches

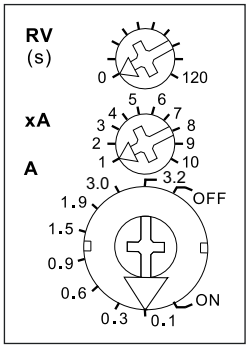

The basis of current A will be set with the lower rotary switch **A**. The following basic values can be selected: 0.1 A, 0.3 A, 0.6 A, 0.9 A, 1.5 A, 1.9 A, 3.0 A and 3.2 A.

The multiplier xA will be set with the middle latching rotary switch **xA** and offers values between 1 and 10. So currents starting from 0.1A (basis of current 0.1A and multiplier 1) can be set.

The release delay RV can be set between 0 and 120 seconds using the upper rotary switch **RV**. The red LED flashes while the set RV time elapses.

The hysteresis is defined as approx. 25%.

Status indication by LED.

The measuring input M1-M2 is electrically isolated from power supply L-N and make contact 1(L)-2/3.

Reference values larger than 32 A can be adapted by an external measuring transformer.

Typical connection

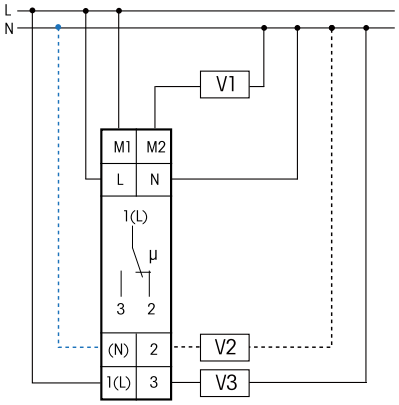

If (N) is connected, the zero passage switching is active.

Technical data

230 V LED lamps	up to 200 W [2] I on ≤ 120 A/5 ms
Supply voltage	230 V
Rated switching capacity	
NO contact 1/3	16 A/250 V AC
NC contact 1/2	10 A/250 V AC
Incandescent lamp load and halogen lamp load [1] 230 V	2300 W
Contact material	$AgSnO_2$
Contact gap	0,5 mm
Standby loss (activ power)	0.4 W

[1] For lamps with 150 W max.

[2] Due to different lamp electronics and depending on the manufacturer, the maximum number of lamps may be limited, especially if the wattage of the individual lamps is very low (e.g. with 2 W LEDs).

The strain relief clamps of the terminals must be closed, that means the screws must be tightened for testing the function of the device. The terminals are open ex works.

Manuals and documents in further languages:

https://eltako.com/redirect/AR12DX-230V



Must be kept for later use!
We recommend the housing for operating instructions GBA14.

ELTAKO GmbH
D-70736 Fellbach
Technical Support English:
☎ +49 711 94350025
✉ technical-support@eltako.de
eltako.com

23/2024 Subject to change without notice.