thePassa P360 Slave UP WH

Item no.: 2010330

Presence and motion detectors
Ceiling installation indoor

Description

- Passive infra-red presence detector for flush-mounted ceiling installation
- Rectangular detection area 360°, 30 x 4,5 m, (135 m²) at mounting height 3 m, for corridors and storage areas, with 2 individually connectable and disconnectable detection zones
- Slave version for thePassa master presence detectors
- Test mode for checking function and detection area
- Extension of detection area via Master/Slave or Master/Master switching, a maximum of 10 detectors can be switched in parallel with each other
- Ceiling installation in flush-mounted socket
- Ceiling installation also possible with surface-mounted frame
- User remote control theSenda S, management remote control SendoPro (optional)





Technical data

	thePassa P360 Slave UP WH
Operating voltage	110 - 230 V AC
Frequency	50 - 60 Hz
Installation height	2 - 6 m
Maximum height	15 m
Minimum height	1.7 m
Installation type	Ceiling installation, Flush-mounted
Colour	White
Switching output	Slave
Power consumption	ca. 0.1 W
Light measurement	Mixed light measurement

	thePassa P360 Slave UP WH
Type of connection	Screw terminals
Max. cable cross section	max. 2 x 2,5 mm²
Size of concealed housing	55 mm
Detection range	150 m² (30 x 5 m)
Detection angle	360°
Ambient temperature	-15°C ... 50°C
Type of protection	IP 54 (when fitted)

thePassa P360 Slave UP WH

Item no.: 2010330

Connection example

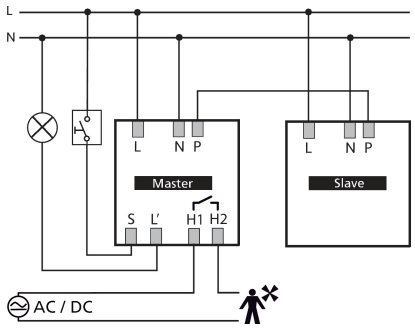

Detection range for planning applications at a temperature of 21 °C

Mounting height (A)	Diagonally (t)	Head on to (R)
2 m	56 m² | 16 m x 3.5 m	56 m² | 16 m x 3.5 m
2.5 m	88 m² | 22 m x 4 m	72 m² | 18 m x 4 m
3 m	135 m² | 30 m x 4.5 m	90 m² | 20 m x 4.5 m
3.5 m	150 m² | 30 m x 5 m	100 m² | 20 m x 5 m
4 m	150 m² | 30 m x 5 m	100 m² | 20 m x 5 m
4.5 m	150 m² | 30 m x 5 m	100 m² | 20 m x 5 m
5 m	150 m² | 30 m x 5 m	100 m² | 20 m x 5 m
5.5 m	150 m² | 30 m x 5 m	100 m² | 20 m x 5 m
6 m	150 m² | 30 m x 5 m	100 m² | 20 m x 5 m

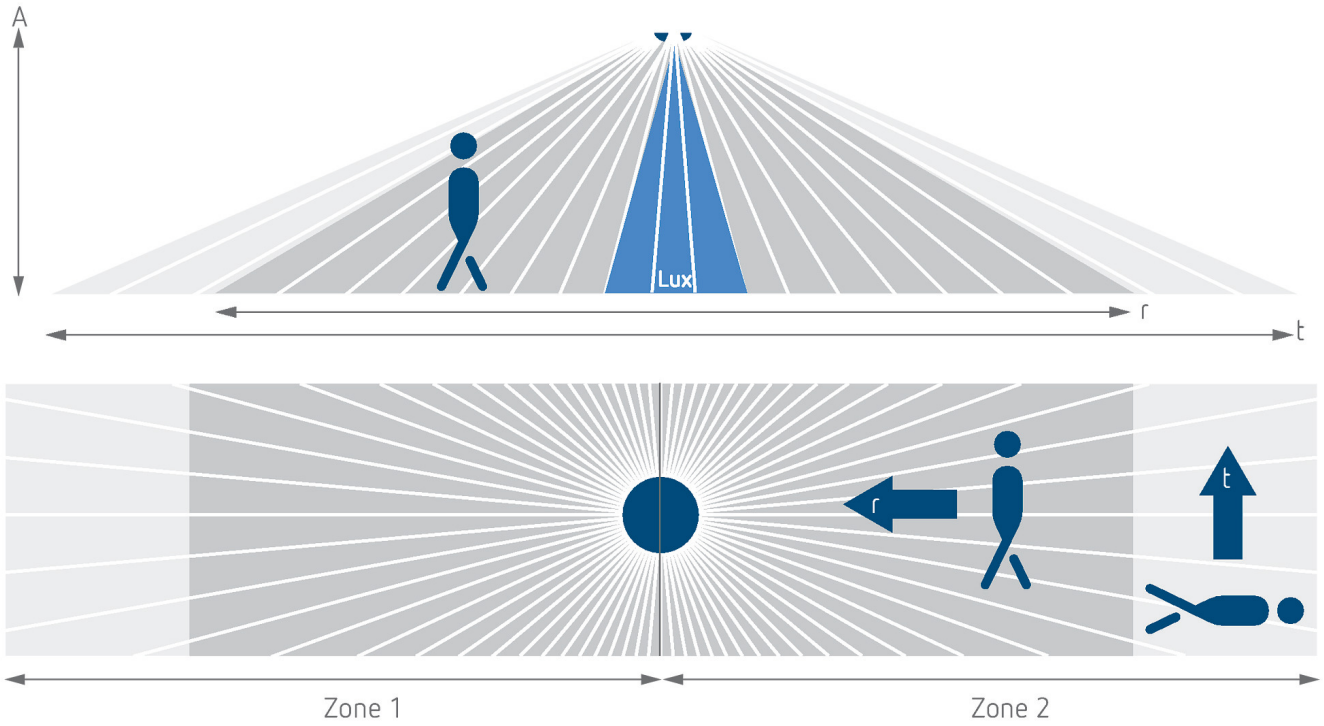

thePassa P360 Slave UP WH

Item no.: 2010330

Detection range according to Sensnorm IEC 63180

Mounting height (A)	Diagonally (T)	Head on to (R)
2.5 m	215 m² | 43 m x 5 m	62 m² | 14.8 m x 4.2 m
6 m	550 m² | 50 m x 11 m	495 m² | 45 m x 11 m
15 m	800 m² | 40 m x 20 m	600 m² | 30 m x 20 m

Scale drawings

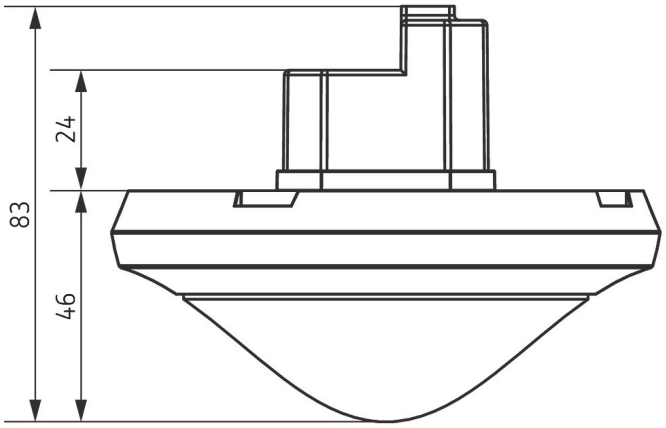

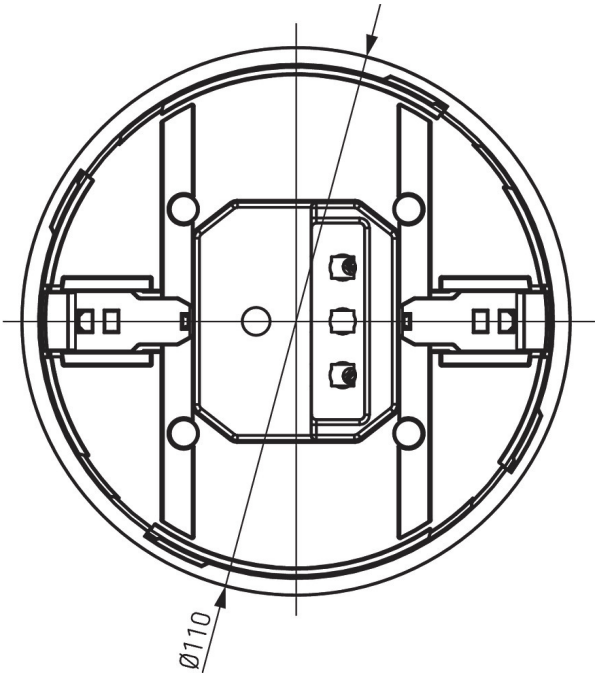

Accessories

theSenda P
Item no.: 9070910



theSenda S
Item no.: 9070911



Surface frame 110A WH
Item no.: 9070912



Masking clip
Item no.: 9070921

thePassa P360 Slave UP WH

Item no.: 2010330

Accessories

QuickSafe
Item no.: 9070531

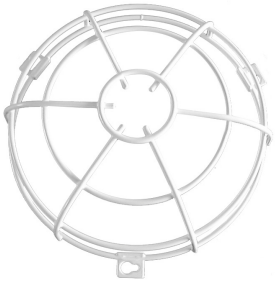

theSenda B
Item no.: 9070985



Cover 110 GR
Item no.: 9070591



Ceiling installation box 68A
Item no.: 9070992



Surface frame 110A BK
Item no.: 9070600



Cover 110 BK
Item no.: 9070851

