thePassa P360-101 UP WH

Item no.: 2010300

Presence and motion detectors
Ceiling installation indoor

Description

- Passive infra-red presence detector for flush-mounted ceiling installation
- Rectangular detection area 360°, 30 x 4,5 m, (135 m²) at mounting height 3 m, for corridors and storage areas, with 2 individually connectable and disconnectable detection zones
- 1 channel light (Relay, 230 V) and 1 channel presence (Relay, floating for HVAC control)
- Automatic presence- and brightness-dependent control for lighting and HVAC
- Mixed light measurement suitable for fluorescent lamps (FL/PL/ESL), halogen/incandescent lamps and LEDs
- Choice of fully or semi-automatic operation
- Adjustable brightness switching value, teach-in function
- Reduction of switch-off delay time in the event of short presence (brief-presence)
- Connection option for sensors or switches for manual switching with automatic recognition of sensor/switch
- Pulse function for staircase light time switch
- Channel H, presence: relay, floating
- e.g. for HVAC control
- Switch-on delay and switch-off delay configurable
- Sensitivity adjustable
- Detection area can be limited using cover clip
- Ready for immediate use due to factory preset
- Test mode for checking function and detection area
- Extension of detection area via Master/Slave or Master/Master switching, a maximum of 10 detectors can be switched in parallel with each other
- Ceiling installation in flush-mounted socket
- Ceiling installation also possible with surface-mounted frame
- User remote control theSenda S, management remote control SendoPro (optional)



Technical data

	thePassa P360-101 UP WH
Operating voltage	110 - 230 V AC
Frequency	50 - 60 Hz
Installation height	2 - 6 m
Maximum height	15 m
Minimum height	1.7 m
Installation type	Ceiling installation, Flush-mounted
Colour	White

	thePassa P360-101 UP WH
Switching output	Light | Presence
Power consumption	ca. 0.1 W
Light measurement	Mixed light measurement
Setting range brightness	30 - 3000 lx
Light switch-off delay	10 s - 60 min

thePassa P360-101 UP WH

Item no.: 2010300

Technical data

	thePassa P360-101 UP WH
Lamp types	Incandescent/halogen lamps, fluorescent lamps, Energy saving lamps, LEDs
Incandescent/halogen lamp load	2300 W
Compact and flourescent lamps	1150 VA (cos φ = 0,5)
Inrush current	max. 800 A / 200 µs
LED lamp < 2 W	60 W
LED lamp 2-8 W	600 W
LED lamp > 8 W	600 W
Switch-on delay presence	0 s - 10 min / Room surveillance
Presence switch-off delay	10 s - 120 min

	thePassa P360-101 UP WH
Switching capacity presence	50 W/50 VA
Type of connection	Screw terminals
Max. cable cross section	max. 2 x 2,5 mm²
Size of concealed housing	55 mm
Detection range	150 m² (30 x 5 m)
Detection angle	360°
Ambient temperature	-15°C ... 50°C
Type of protection	IP 54 (when fitted)

Connection example

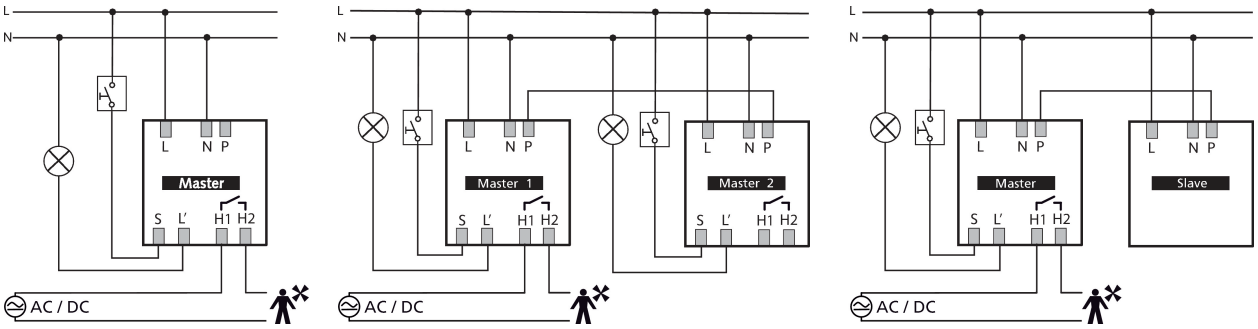

Detection range for planning applications at a temperature of 21 °C

Mounting height (A)	Diagonally (t)	Head on to (R)	
2 m	56 m² | 16 m x 3.5 m	56 m² | 16 m x 3.5 m	
2.5 m	88 m² | 22 m x 4 m	72 m² | 18 m x 4 m	
3 m	135 m² | 30 m x 4.5 m	90 m² | 20 m x 4.5 m	
3.5 m	150 m² | 30 m x 5 m	100 m² | 20 m x 5 m	
4 m	150 m² | 30 m x 5 m	100 m² | 20 m x 5 m	
4.5 m	150 m² | 30 m x 5 m	100 m² | 20 m x 5 m	
5 m	150 m² | 30 m x 5 m	100 m² | 20 m x 5 m	
5.5 m	150 m² | 30 m x 5 m	100 m² | 20 m x 5 m	
6 m	150 m² | 30 m x 5 m	100 m² | 20 m x 5 m	

Detection range for planning applications at a temperature of 21 °C

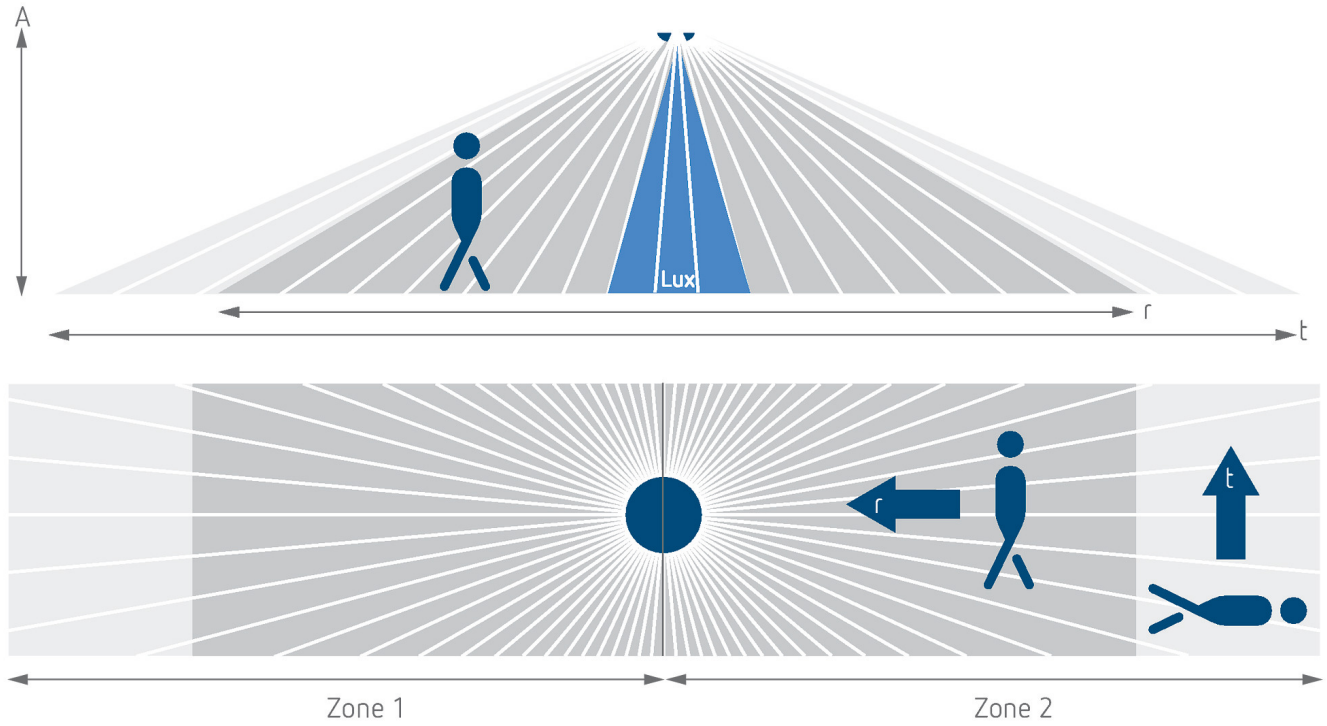

Detection range according to Sensnorm IEC 63180

Mounting height (A)	Diagonally (T)	Head on to (R)	
2.5 m	215 m² | 43 m x 5 m	62 m² | 14.8 m x 4.2 m	
6 m	550 m² | 50 m x 11 m	495 m² | 45 m x 11 m	
15 m	800 m² | 40 m x 20 m	600 m² | 30 m x 20 m	

thePassa P360-101 UP WH

Item no.: 2010300

Scale drawings

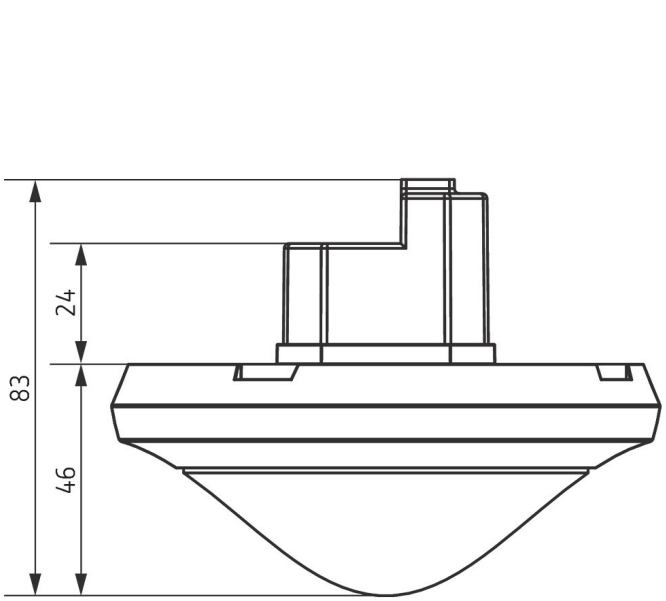

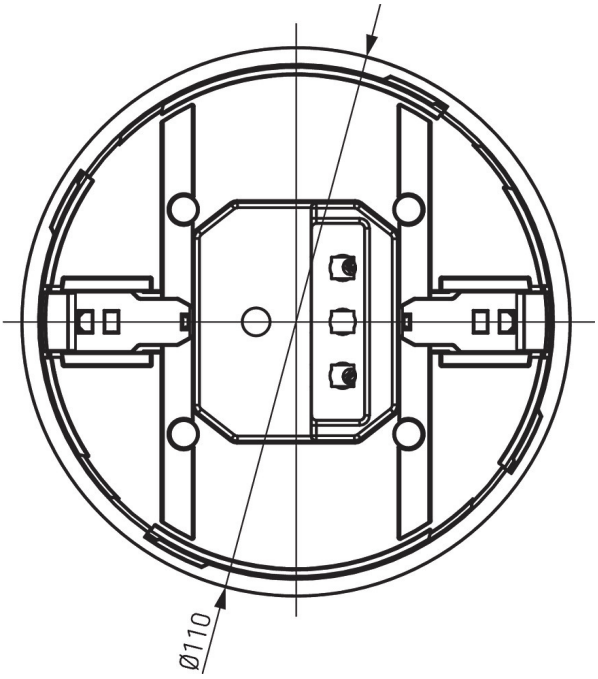

Accessories

theSenda P
Item no.: 9070910



theSenda S
Item no.: 9070911



Surface frame 110A WH
Item no.: 9070912



Masking clip
Item no.: 9070921

QuickSafe
Item no.: 9070531

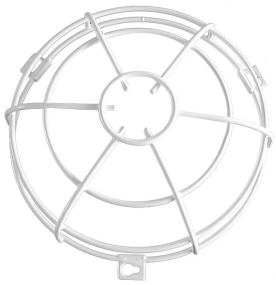

theSenda B
Item no.: 9070985



Cover 110 GR
Item no.: 9070591



Ceiling installation box 68A
Item no.: 9070992



Accessories

Surface frame 110A BK
Item no.: 9070600



Cover 110 BK
Item no.: 9070851

