# DIMAX 545 plus P

## Item no.: 5450130

**Time and light control**
**Dimmer**

## Description

- Universal dimmer for R, L and C loads with automatic load detection
- Operation by button or app via Bluetooth Low Energy
- Adjustable minimum brightness for LEDs
- Adjustable dimming response
- Adjustable staircase light function
- App for Android and iOS
- Time functions
- Astronomical functions
- Night break
- Optimised settings for LEDs, incandescent lamps
- Easy installation thanks to a highly compact housing
- Ideal for all dimmable LEDs and halogen lamps
- Memory function saves the most recently set light level value and then dims to this value the next time it is switched on
- Convenient snooze function
- Special load setting
- Sequential scenes
- Password protection possible
- „Gentle" lamp-conserving function for switching on and off
- Automatic detection of the load type
- Overheating protection against overload
- Short-circuit protection




## Technical data

| | DIMAX 545 plus P |
|---|---|
| Operating voltage | 230 V AC |
| Frequency | 50 - 60 Hz |
| Installation type | Flush-mounted |
| Stand-by consumption | ~0.15 W |
| LED lamp < 2 W | 250 W |
| LED lamp > 8 W | 250 W |
| LED lamp 2-8 W | 250 W |
| Incandescent/halogen lamp load | 250 W |

| | DIMAX 545 plus P |
|---|---|
| Transformer electronic (C) | 250 W |
| Programmierung per App | √ |
| Multi-function | √ |
| Setting | App |
| Load detection | √ |
| Ambient temperature | -25°C ... 45°C |

# DIMAX 545 plus P

Item no.: 5450130

## Connection example

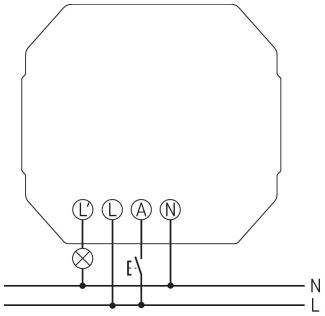


## Scale drawings

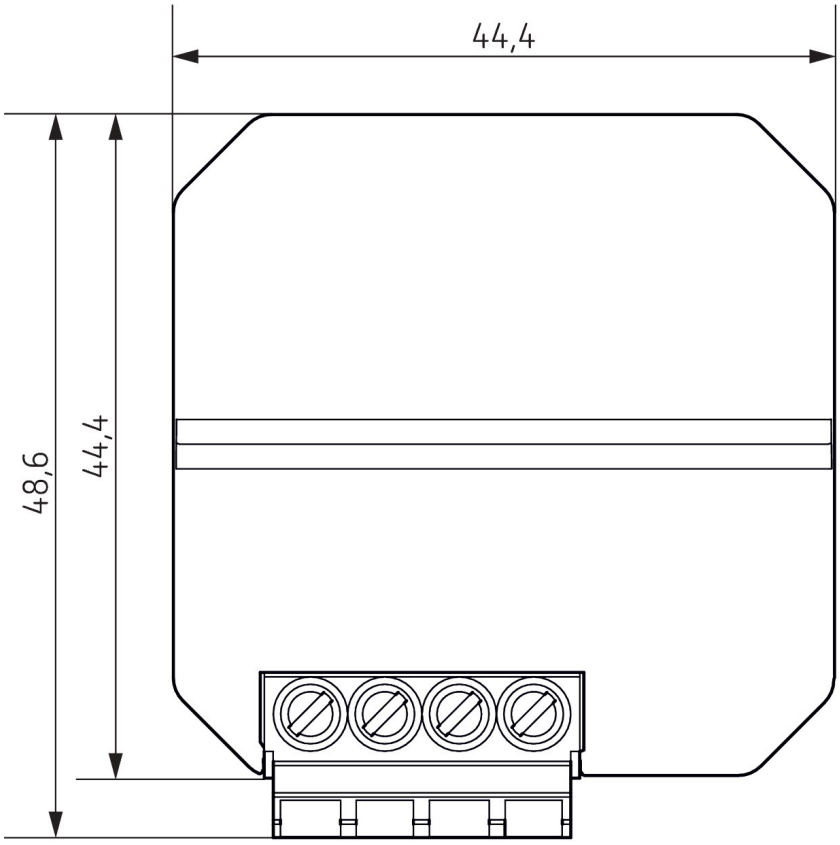


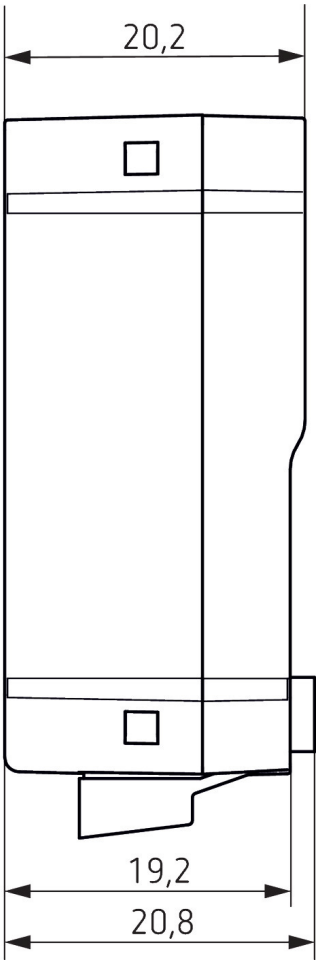

## Accessories

**Compensation module LED**
Item no.: 9070825

