LUNA 131 S KNX

Item no.: 1319201

KNX
Sensor technology

Description

- Brightness and temperature sensor
- For brightness and temperature dependent controlling in outdoor areas
- 5 freely configurable channels: 1 sun protection channel and 4 universal channels
- Sun protection channel with automated sun protection especially for blind, awning and shutter applications
- Universal channels allow linking of brightness and temperature
- Brightness range from 1 - 100,000 lux
- Temperature range -20 °C to + 55 °C
- Learning object for brightness threshold



Technical data

	LUNA 131 S KNX
Operating voltage KNX	Bus voltage, ≤5 mA
Installation type	Wall installation
Type of connection	KNX bus terminal
Measuring range brightness	1 - 100000 lx

	LUNA 131 S KNX
Setting range temperature	-20°C ... 55°C
Ambient temperature	-25°C ... 55°C
Type of protection	IP 54

LUNA 131 S KNX

Item no.: 1319201

Scale drawings

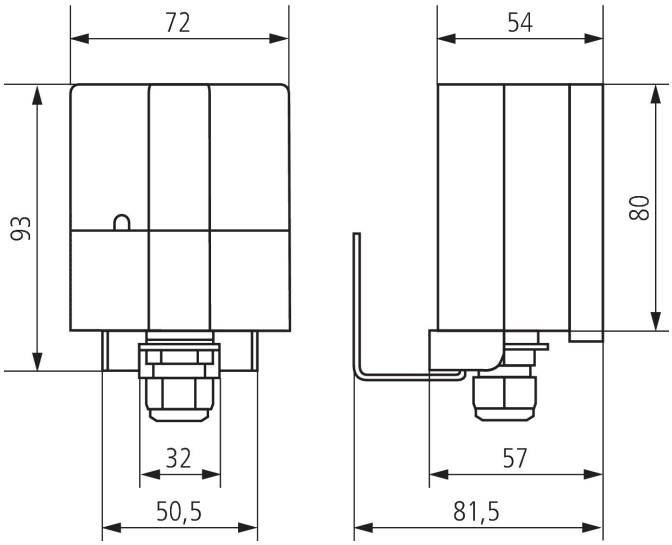

Accessories

Mast mounting S
Item no.: 9070928



Mast mounting WML1
Item no.: 9070925

