FRI 77 g

Item no.: 0770033

theben

Time and light control
Analogue time switches

Description

- Analogue cooling time switch with daily and short time program
- 2 channels
- Wall-mounted
- 8 tappets included in delivery
- Optional delayed switching on of fan
- Tappet
- 2 separate switching discs
- 24 hour switching disc for hour preselection
- 60 minute switching disc for setting short contact duration



Technical data

	FRI 77 g
Operating voltage	230 V AC
Frequency	50 Hz
Number of channels	2
Installation type	Surface-mounted
Type of connection	Screw terminals
Program	Daily and defrost program
Switching capacity at 250 V AC, cos φ = 1	16 A
Switching capacity at 250 V AC, cos φ = 0,6	2.5 A
Shortest switching times	2 min, 1 h

	FRI 77 g
Programmable every	1 min, 1 h
Time accuracy at 25 °C	Synchronised with mains
Type of contact	Changeover contact
Switching output	Potential-free, not for SELV
Stand-by consumption	0.9 W
Housing and insulation material	High-temperature resistant, self-extinguishing thermoplastic
Type of protection	IP 20
Protection class	II according to EN 60 730-1
Ambient temperature	-10°C ... 50°C

Connection example

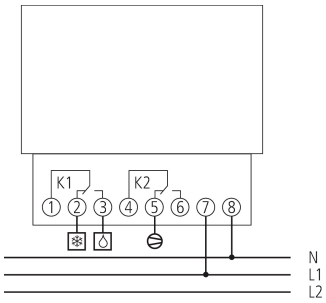

Scale drawings

