TR 641 top2 RC

Item no.: 6410300

Time and light control
Digital time switches

Description



- Digital time switch with yearly and astronomical time program
- Time synchronisation via connection of external DCF or GPS antennas, additional posititioning for astronomical program with GPS
- 1 channel
- External input
- Connectable sensors (external selector switch, sequence timer)
- Connectable switches (ON or OFF permanent switching)
- Extension module can be connected
- Memory card OBELISK top2 included in delivery
- DuoFix spring terminals
- For 2 conductors each
- Wire or strand (with or without wire end sleeve)
- Wire diameter: 0.5 - 2.5 mm²
- Button for releasing plug-in connection
- Text-oriented user guidance in display
- Preset date and time
- fully operable without mains connection
- 800 memory locations
- Interface for OBELISK top2 memory card (PC programming)
- 2. insertable switching program
- Copying programs
- Storing programs
- 8 year power reserve (lithium battery)
- Zero-cross switching for leay-saving switching and high lamp loads (not with 24 V devices)
- Automatic summer/winter time changeover
- can be deactivated
- Date rule options are already stored for Europe, the USA and other countries
- own date rule options or changeover around set dates are available
- ON-OFF switching times
- Pulse program
- Cycle program
- Extensive yearly clock functions
- Basic weekly program and 14 different weekly programs with priority levels and date ranges
- Permanent ON / permanent OFF with highest priority via date range program option
- fixed and variable public holidays, public holidays dependent on Easter, day and date ranges with serial pattern
- Public holiday database for Germany including all Federal states, Switzerland, France etc.
- Program simulation on clock display

TR 641 top2 RC

Item no.: 6410300

Description

- Graphic program simulation with 12 month overview for all channels on PC
- Astronomical time switch function (automatic calculation of sunrise and sunset times for the whole year)
- Offset for adjusting of sunrise and sunset times
- Position data via coordinates or country/city lists can be programmed
- Optional production of own city list (favourites) and a table with own astronomical times on PC
- Fixed ON-OFF switching times can be programmed (e.g. night time interruption)
- Simulation of astronomical switching times (calculated astronomical times and programmed ON/OFF switching times) for the whole year
- various astronomical setting options (evening ON - mornings OFF or evenings OFF - mornings ON, astronomical pulse)
- Switching preselection
- Permanent switching ON/OFF
- Count-down timer
- Integrated operating hour counter
- Reset option
- Service function for monitoring maintenance intervals
- Holiday program
- 2 random programs
- Display back light (can be turned off)
- PIN coding

Technical data

	TR 641 top2 RC
Operating voltage	110 - 240 V AC
Frequency	50 - 60 Hz
Width	3 modules
Installation type	DIN rail
Type of contact	Changeover contact
Switching output	Phase-independent
Opening width	< 3 mm
Program	Yearly program, Astronomical program
Program functions	ON-OFF, Pulse, Cycle
Number of channels	1
External inputs	1
Number of memory locations	800
Power reserve	8 years
Switching capacity at 250 V AC, cos φ = 1	16 A
Switching capacity at 250 V AC, cos φ = 0,6	10 A
Incandescent/halogen lamp load	2600 W
Incandescent/halogen lamp load 120 V	1300 W
Energy saving lamps	37 x 7 W, 30 x 11 W, 26 x 15 W, 26 x 20 W, 11 x 23 W

	TR 641 top2 RC
Energy saving lamps 120 V	18 x 7 W, 15 x 11 W, 13 x 15 W, 13 x 20 W, 11 x 23 W
LED lamp < 2 W	50 W
LED lamp 2-8 W	180 W
LED lamp > 8 W	200 W
Switching capacity min.	ca. 10 mA
Shortest switching times	1 s
Time accuracy at 25 °C	≤ ± 0,5 s/day (quartz) or DCF77/GNSS
Time basis	Quartz/DCF77/GNSS
Stand-by consumption	~1.2 W
Capacity loss max.	1.1 W
Memory card supplied	✓
Type of connection	DuoFix spring terminals
Externe Antenne anschließbar	✓
Display	LCD
Keyboards	4 touch buttons
Housing and insulation material	High-temperature resistant, self-extinguishing thermoplastic
Type of protection	IP 20
Protection class	II according to EN 60 730-1
Voltage	110-240 V AC
Ambient temperature	-30°C ... 45°C

TR 641 top2 RC

Item no.: 6410300

Connection example

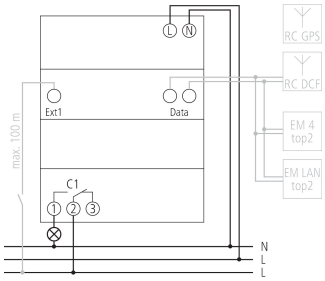

Scale drawings

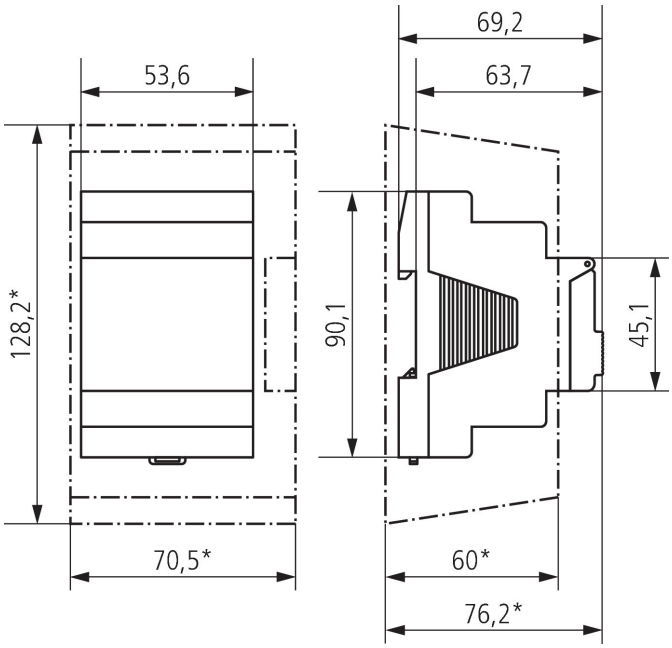

Accessories

EM 4 top2
Item no.: 6490104



EM LAN top2
Item no.: 6490900



Wall mounting kit 52,5 mm
Item no.: 9070050



Antenna RC-DCF
Item no.: 9070410



TR 641 top2 RC

Item no.: 6410300

Accessories

PC set OBELISK top2/3
Item no.: 9070409



Memory card OBELISK top2
Item no.: 9070404



Front panel kit
Item no.: 9070001



Antenna RC-GNSS R
Item no.: 9070807



Antenna RC-GNSS
Item no.: 9070823

