theben

307253 04
21.03.2025

EN **Time switch**

TR 610 top3
6100130
TR 612 top3
6120130
TR 610 top3 12–24V
6104130



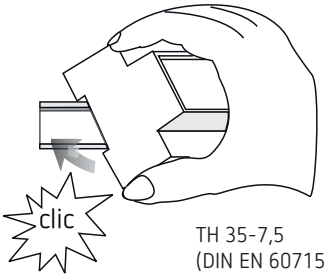

TH 35-7,5
(DIN EN 60715)

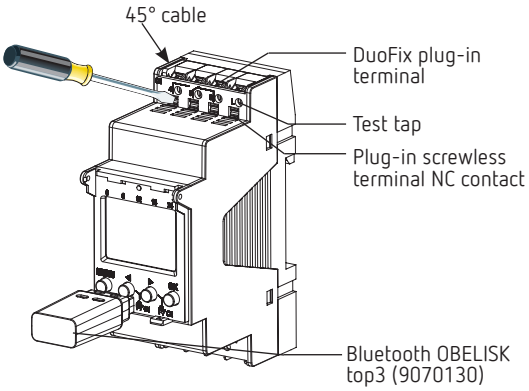

1. General information

- The device is designed for installation on DIN rails (in accordance with EN 60715)
- The device corresponds to type 1.B.S.T.U in accordance with IEC/EN 60730-2-7
- Power reserve (10 years) is reduced if memory card is inserted (using battery power)

2. Safety

Assembly and installation should only be carried out by a qualified electrician, somebody who has completed appropriate professional training and has the knowledge and experience necessary to be able to recognise and avoid the potential dangers posed by electricity.

Before installation/disassembly, disconnect the power supply and ensure that the parts are no longer live.

Prior to commissioning and using the product, read the entire manual and follow the instructions.

3. Proper use

- The time switch is used for lighting, ventilation and flushing applications etc.
- Interface for Bluetooth OBELISK top3 (app)
- Only for use in closed, dry rooms

⚠ Do not use on safety devices, e.g. escape route doors, fire safety equipment etc.

4. Installation and connection

Mounting the time switch

➤ Mount on DIN rails.

⚠ Check the depth of the control cabinet when OBELISK top3 is connected. The depth must be > 94 mm.

Connecting the time switch

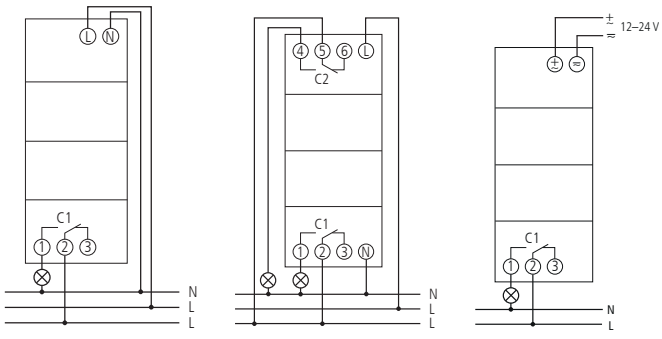

TR 610 top3 TR 612 top3 TR 610 top3 12–24V

Connecting the cable

➤ Strip cable to 8 mm (max. 9).
➤ Insert cable in the open DuoFix plug-in terminal at 45°.

ⓘ 2 cables per terminal position possible.

➤ To open the DuoFix plug-in terminal, press screwdriver downwards.

Disconnecting the cable

➤ Use the screwdriver to push the spring plug-in terminal downwards.

5. Device description

Display & buttons

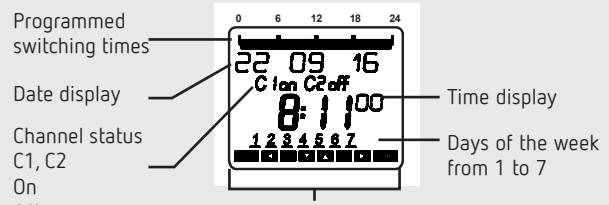

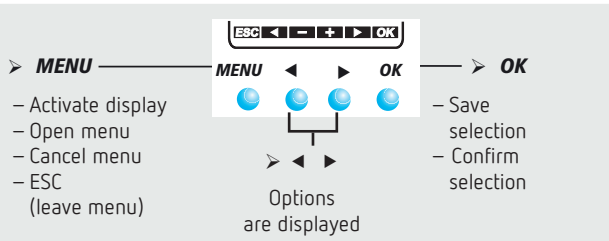

Operating instructions

1. Read text line text/symbol represents query

2. Make a decision

YES
Confirmation

Press OK

NO
Modify/ Change

Press ◀ ▶

Overview of navigation menu

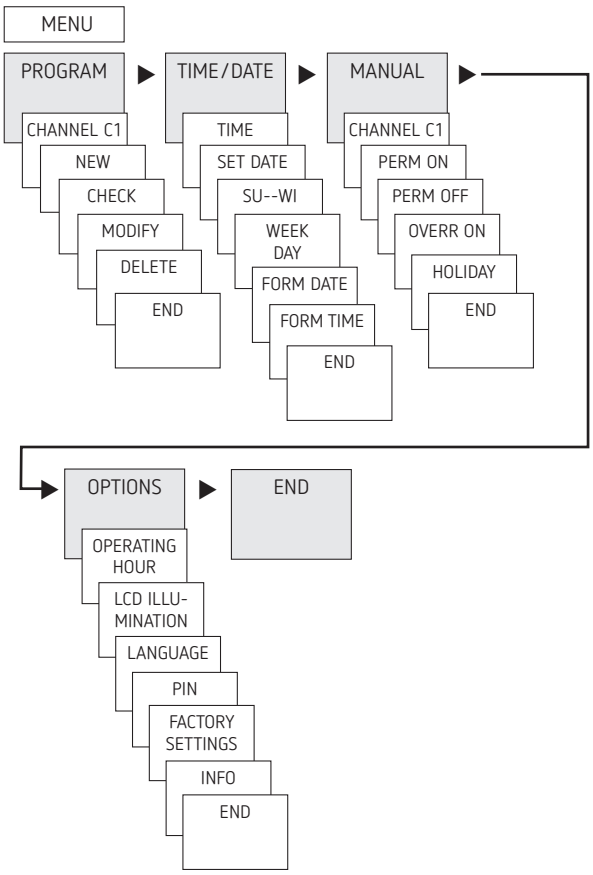

Initial operation

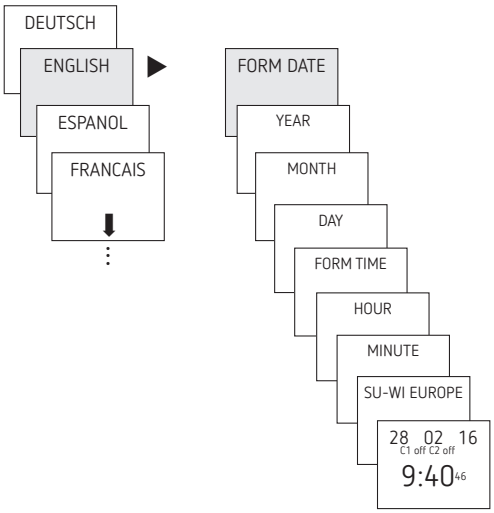

➤ Set language, date, time as well as summer/winter time (SU-WI).
➤ Press any button and display follows on screen (see figure).

6. Settings and functions

Set switching time

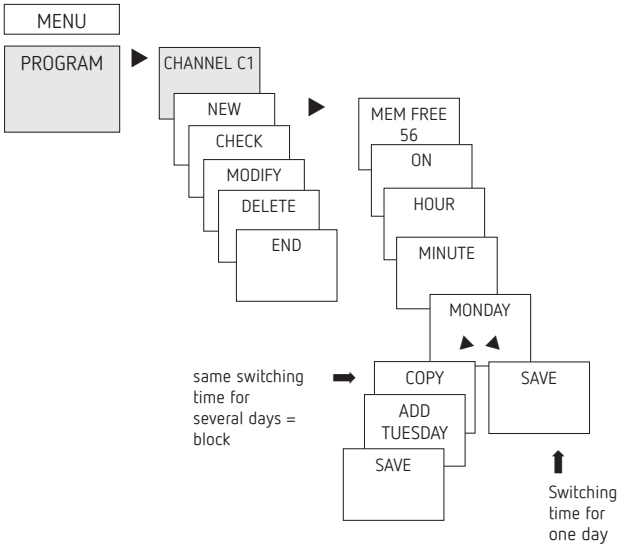

ⓘ A switching time always consists of a start time and an end time.

ⓘ There are 56 memory cells available.

Example: Switch on sports hall lighting from Mon – Fri, 7:30 to 12:00 hrs

- ➤ Press MENU.
- ➤ Select PROGRAM and press OK to confirm.
- ➤ Select CHANNEL C1 or C2, confirm with OK.
- ➤ Select NEW and press OK to confirm.
- ➤ Select ON (for turn-on time) or OFF (for turn-off time), confirm with OK.
- ➤ Set required turn-on time (Mo – Fr, 7:30), confirm with OK.
- ➤ Select COPY, confirm with OK.
- ➤ ADD TUESDAY is displayed, confirm by pressing OK and also confirm the days We, Th, Fr by pressing OK.
- ➤ Continue with ▶ until SAVE is displayed.
- ➤ Confirm by pressing OK.

Repeat all steps for the turn-off time, however instead of selecting ON with ▶ select OFF and enter 12:00 for hour and minute.

Change switching times

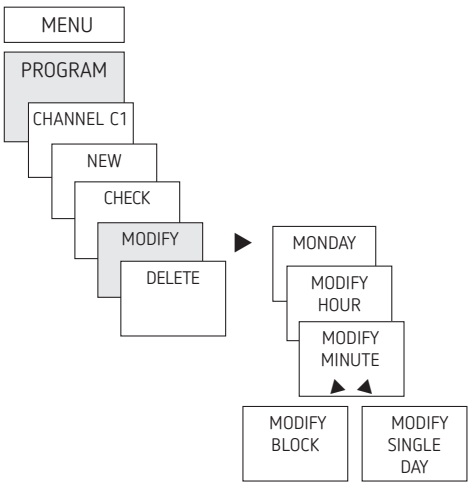

ⓘ You can either change or delete a block, i.e. a switching time copied for several days (e.g. Mon-Fri) or a single switching time.

Change individual switching times

- ➤ Press MENU.
- ➤ Select PROGRAM and press OK to confirm.
- ➤ Select CHANNEL C1 or C2, confirm with OK.
- ➤ Select MODIFY, confirm by pressing OK.
- ➤ Select day, confirm with OK.
- ➤ MODIFY HOUR, use the + or – buttons to change hour and minute and confirm with OK.
- ➤ To change several switching times, select MODIFY BLOCK, confirm with OK.

Delete switching program

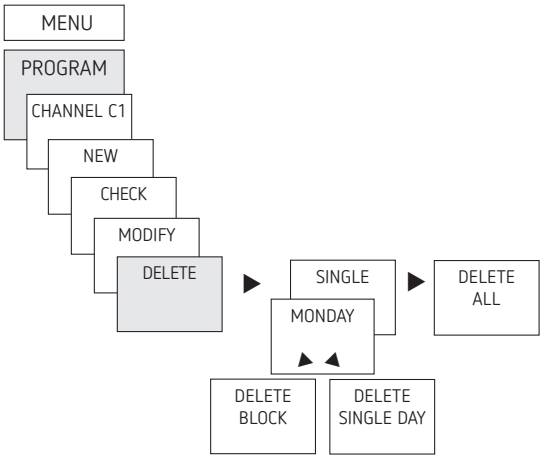

ⓘ You can either delete a block, i.e. a switching time copied for several days (e.g. Mon-Fri) or a single switching time.

- ➤ Press MENU.
- ➤ Select PROGRAM and confirm with OK.
- ➤ Select CHANNEL C1 or C2, confirm with OK.
- ➤ Select DELETE, confirm with OK.
- ➤ INDIVIDUAL is displayed (with ▶ DELETE ALL), confirm with OK.
- ➤ MONDAY is displayed, confirm with OK.
- ➤ Select DELETE BLOCK, confirm with OK.
- ➤ With ▶ DELETE MONDAY etc. individual days can also be cleared.

Setting holiday function

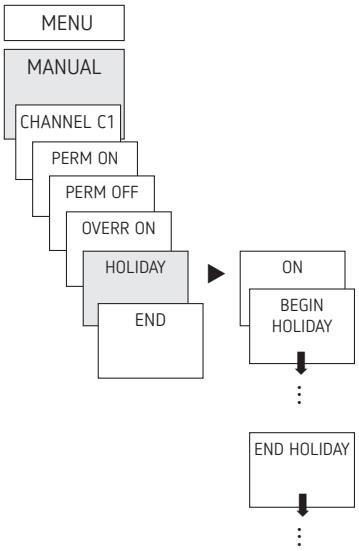

➤ Press MENU.
➤ Select MANUAL and press OK to confirm.
➤ Select CHANNEL C1 or C2, confirm with OK.
➤ Select HOLIDAY and press OK to confirm.
➤ Select ON and press OK to confirm.
➤ Select START HOLIDAY and press OK to confirm.
➤ Enter YEAR, MONTH, DAY, HOUR and press OK to confirm.
➤ Select END HOLIDAY and press OK to confirm.
➤ Enter YEAR, MONTH, DAY, HOUR and press OK to confirm.

Activating PIN code

The PIN code is set in OPTIONS via the menu.

ⓘ If you have forgotten your PIN, call the Theben Hotline.

ⓘ Have the serial number ready.

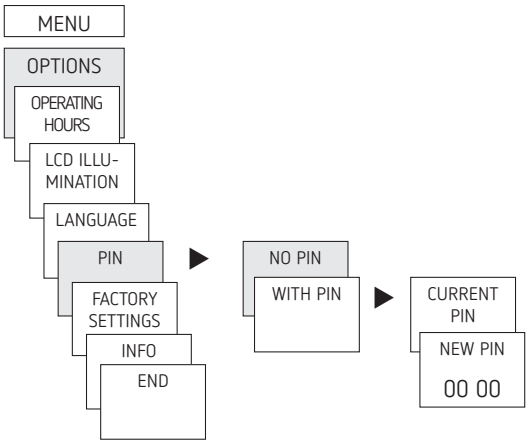

Setting manual or permanent switching

Manual or permanent switching can be set via the menu in MANUAL or (in the automatic screen) by button combination (see picture).

- Manual control:
  Reversing the channel status to the next automatic or programmed switching.
- Permanent switching:
  As long as a permanent switching (on or off) is activated, the programmed switching times are ineffective.

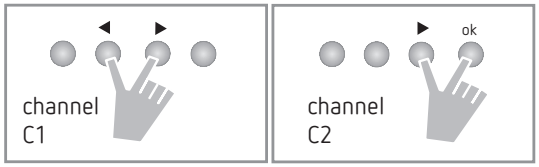

Activating manual control

➤ Briefly press both buttons simultaneously.

Activating permanent switching

➤ Press both buttons simultaneously for 2 seconds.

Cancelling manual/permanent switching

➤ Press both buttons simultaneously.

Hour counter

The operating hours of the channel (relay) are displayed and deleted in the OPTIONS menu. If the number of operating hours exceeds the value set in the Service menu, SERVICE will appear in the display.

Example: Replace a lamp after after 5,000 h.

➤ Delete operating hours or set a higher value in Service (e.g. to 10,000 h).

Using Bluetooth OBELISK top3

All functions can also be transferred to the time switch using the Bluetooth OBELISK top3 memory card (9070130).

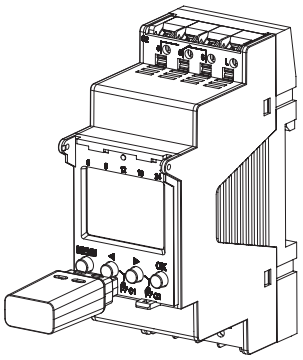

Copying OBELISK → TIME SWITCH

This copies the switching program and optionally all time switch settings (e.g. external input, time format etc.) from the memory card in the time switch.

Copying TIME SWITCH → OBELISK

This copies all switch programmes and settings from the time switch to the memory card.

Starting OBELISK program

Takes on the switching times that are programmed on the memory card.
As soon as the memory card is removed, the switching times of the time switch are re-activated.

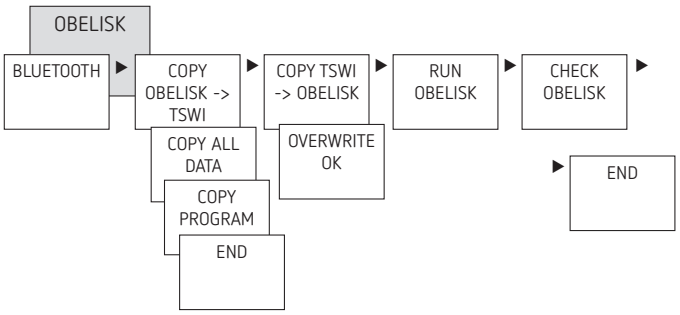

Connect time switch, Bluetooth OBELISK top3 and smartphone (via app)

The devices in the top3 range can be programmed using an app (for Android, iOS) on a mobile end device. Communication takes place via Bluetooth OBELISK top3. Switch programmes are transferred and direct switch commands are sent to the device.

➤ Download the OBELISK top3 app from the App Store or Google Play Store.

Download on the App Store GET IT ON Google Play

ⓘ Bluetooth connection only possible in automatic mode, not in manual mode like OPTIONS etc.

➤ Open the app and activate using one of the 3 commands, by pressing „Download“ , „Manual command“ or „Upload“ .

→ Device / device list appears on the display.

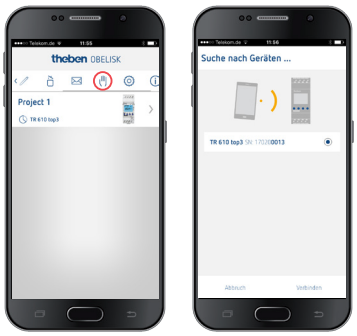

➤ Press „Connect“.

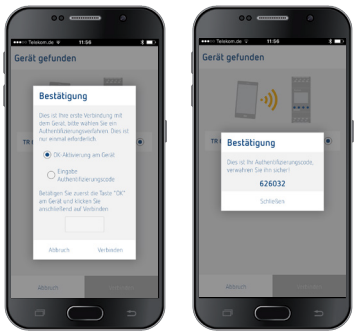

➤ Press OK on the time switch.

→ The display shows BLUETOOTH ACTIVE.

➤ Press „Close“ in the app within 30 s.

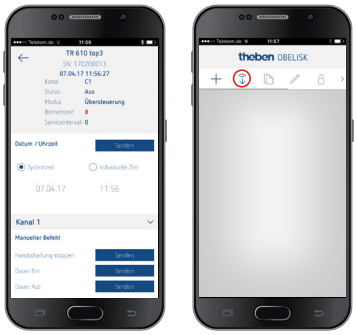

Now, for example, projects can be created and uploaded.



Resetting the time switch

➤ Press the 4 buttons simultaneously.

→ You can choose between KEEP PROGRAM and DELETE PROGRAM.

7. Technical data

Operating voltage:	230 V AC +10 % / −15 % 6104130 : 12−24 V AC/DC, +10 %/−15 %
Frequency:	50−60 Hz
Standby:	0,4 W (6104130: 0,15−max. 0,3 W)
Max switching capacity:	16 A (at 250 V, cos φ = 1)
Switching capacity: *	10 A (at 250 V, cos φ = 0,6) 6104130: 2 A
Min. switching capacity:	10 mA/230 V AC 100mA/12 V AC/DC
Switch output:	Switching of any phase is permitted (6120130).
Switch output 6100130 + 6104130:	The switching of SELV (safety extra-low voltage) and mains are permitted.
Switch output:	Zero-cross switching for relay-friendly switching and for high lamp loads (not for 24 V devices)
Shortest switching time:	1 min
Switching accuracy:	Accurate to the second
Protection rating:	IP 20 in accordance with EN 60529
Protection class:	II in accordance with EN 60730-1 subject to designated installation
Operating temperature:*	−30 °C ... +60 °C (6104130, 6120130: −30 °C ... +55 °C) The time switch display is only fully functional at temperatures from +5 °C ... +55 °C.
Power reserve:	10 years at +20 °C (without Bluetooth OBELISK top3)
Time accuracy (typical):	± 0,25 s/day (25 °C)
Rated impulse withstand voltage:	4 kV

Pollution degree:	2
Software:	Class A
Contact:	Two way switch
Glow lamp load:	2600 W (6104130: 1400 W)
Halogen lamp load:	2600 W (6104130: 1400 W)
Fluorescent lamp load: uncorrected: Series corrected: parallel-corrected:	2600 VA (6104130: 1400 VA) 2600 VA (6104130: 1400 VA) 1300 W (130 µF) (6104130: 120 W 12 µF)
Compact fluorescent tubes (EVG):	1100 W (6104130: 25 W)
LED lamps (< 2 W):	50 W (6104130: 5 W)
LED lamps (> 2 W):	600 W (6104130: 50 W)
Bluetooth OBELISK top3: – Protection rating: – Temperature: – Range:	 IP 40 –30 °C to +55 °C 15 m on open air test site

6104130/6100130/6120130:
*Rigid cables (s): 16 A/55 °C
Flexible cables (f): 13 A/45 °C

Cleaning and service

➤ Only use a dry, soft cloth to clean the device surface.
➤ Do not use any cleaning agents or solvents.

Disposal



Dispose of the device separately from domestic waste at an official collection point.

8. Dimensional drawings

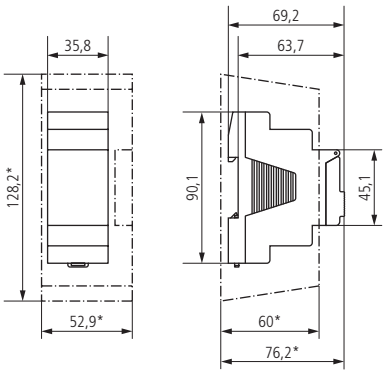

9. Contact

Theben AG
Hohenbergstr. 32
72401 Haigerloch
GERMANY
Phone +49 7474 692-0
Fax +49 7474 692-150

Hotline
Phone +49 7474 692-369
hotline@theben.de
www.theben.de