theMura S180 Slave B UP

Item no.: 2060760

Presence and motion detectors
Wall installation indoor

Description

- Passive infra-red motion/presence detector for wall installation
- Square detection area 170°, 14 x 17 m (238 m²)
- Without frame, adapter frames for common switch ranges available as accessory
- Slave version, for use in combination with theMura S180-100 UP WH, theMura S180-100 B UP, theMura S180-101 UP WH or theMura S180-101 B UP as a master
- Restriction of detection area possible
- Mixed light measurement suitable for the control of fluorescent, incandescent, halogen lamps and LEDs
- Integrated button (can be blocked)
- Product design by ID AID



Technical data

	theMura S180 Slave B UP
Operating voltage	230 V AC
Frequency	50 - 60 Hz
Installation height	0.8 - 1.2 m
Installation type	Wall installation, Flush-mounted
Colour	White
Switching output	Slave
Power consumption	~0.4 W
Light measurement	Mixed light measurement
Lamp types	Incandescent/halogen lamps, fluorescent lamps, Energy saving lamps, LEDs

	theMura S180 Slave B UP
Type of connection	Spring terminals
Size of concealed housing	55 mm
Detection range	238 m² (14 x 17 m)
Detection angle	170°
Ambient temperature	-15°C ... 45°C
Type of protection	IP 20

theMura S180 Slave B UP

Item no.: 2060760

Connection example

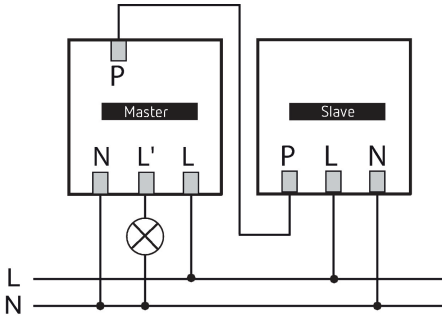

Detection range for planning applications at a temperature of 21 °C

Mounting height (A)	Head on to (R)	Diagonally (t)	Sitting (S)
1.2 m	120 m² | 12 m x 10 m	238 m² | 14 m x 17 m	

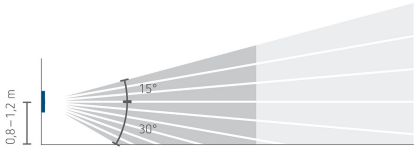

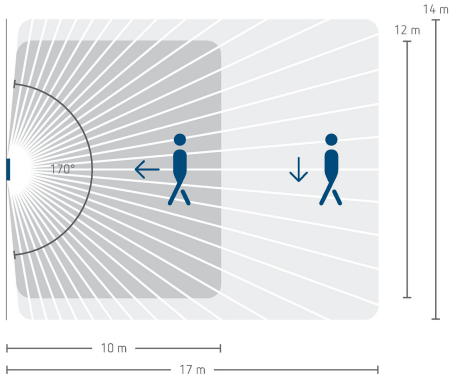

Scale drawings

theMura S180-100 UP WH (2060650) + theMura S180-101 UP WH (2060655)

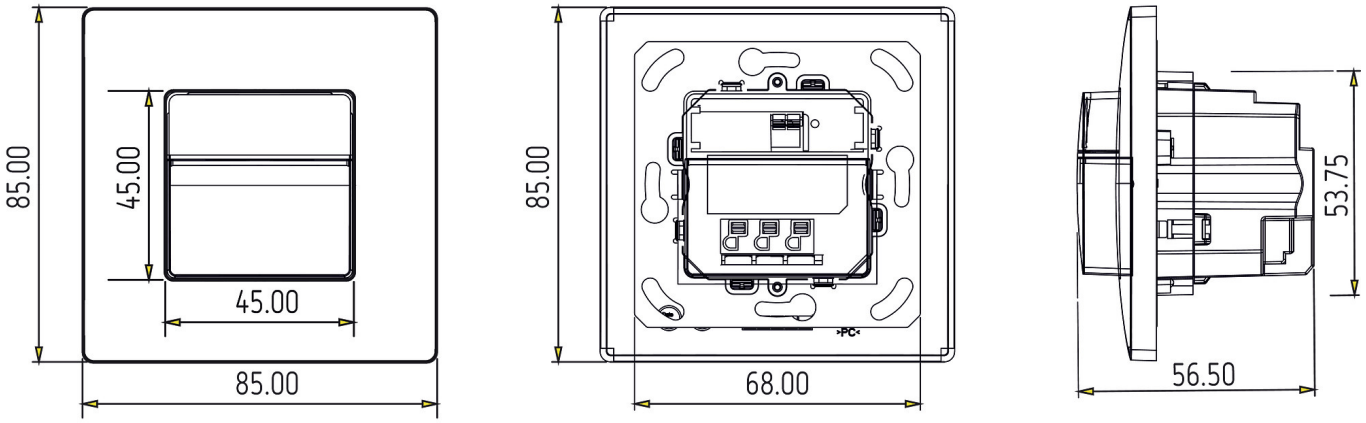

theMura S180-100 UP (2060750) + theMura S180-101 B UP (2060755)

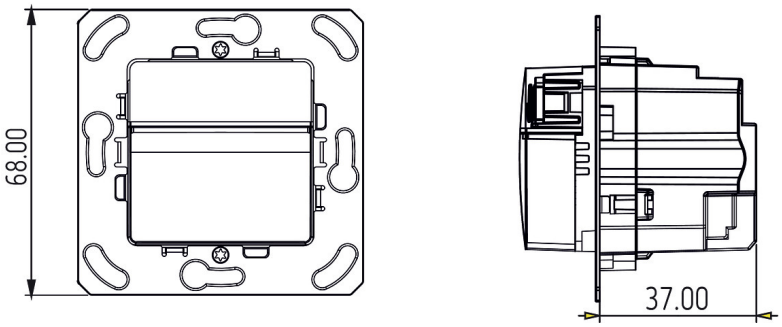

Accessories

Surface frame LUXA 103-200
Item no.: 9070504

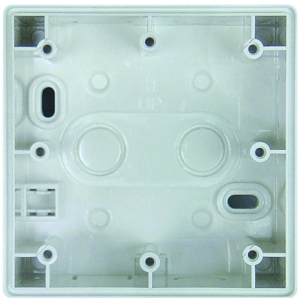

Adapter frame 45A BJBSI WH
Item no.: 9070788

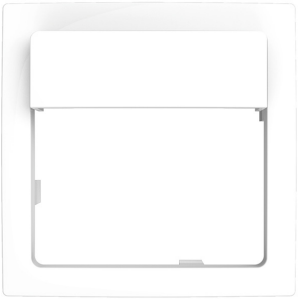

Adapter frame 45A MMP WH
Item no.: 9070790



Adapter frame 45A GS WH
Item no.: 9070791



Accessories

Adapter frame 45A JAS WH
Item no.: 9070789

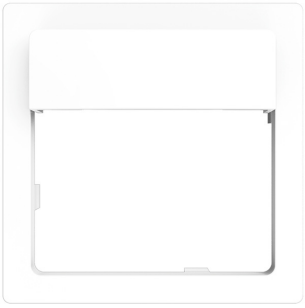

Adapter frame 45A BS WH
Item no.: 9070792



Cover frame theMura Theben WH
Item no.: 9070798

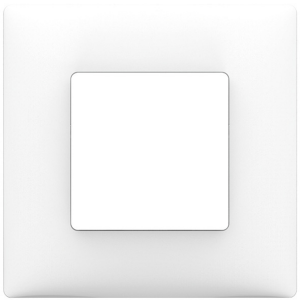

Cover frame theMura FED WH
Item no.: 9070786



Cover frame theMura LM WH
Item no.: 9070787

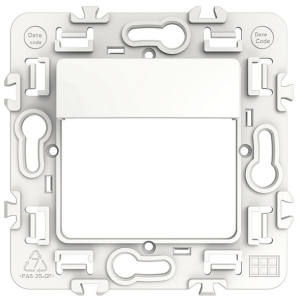

Adapter frame 45A BJRE WH
Item no.: 9070754

Adapter frame 45A MEMP CL
Item no.: 9080004



Adapter frame 45A GIST CL
Item no.: 9080005



Adapter frame 45A BESI CL
Item no.: 9080006



Adapter frame 45A BJBA CL
Item no.: 9080002



Adapter frame 45A JUAS CL
Item no.: 9080003



Adapter frame 45A BJRE CL
Item no.: 9080001



theMura S180 Slave B UP

Item no.: 2060760

Accessories

Adapter frame 45A FEED CL
Item no.: 9080007

