# theMura S180-101 B UP

Item no.: 2060755

**Presence and motion detectors**
**Wall installation indoor**

## Description

- Passive infra-red presence detector for wall installation
- Square detection area 170°, 14 x 17 m (238 m²)
- Without frame, adapter frames for common switch ranges available as accessory
- 1 channel light (Relay, 230 V) and 1 channel presence (Relay, floating for HVAC control)
- Fully or semi-automatic operation
- External button can be connected
- Adjustable brightness switching value, teach-in function
- Automatic calibration of brightness measurement
- Switch-on delay configurable
- Short-term presence
- Acoustic function
- Orientation light
- Configurable sensitivity
- External button can be connected
- Staircase light function
- Extension of detection area via master/slave switching
- Ready for immediate use due to factory presetting
- Remote operation with theSenda S, theSenda P, theSenda B
- Mixed light measurement suitable for the control of fluorescent, incandescent, halogen lamps and LEDs
- Integrated button (can be blocked)
- Product design by ID AID

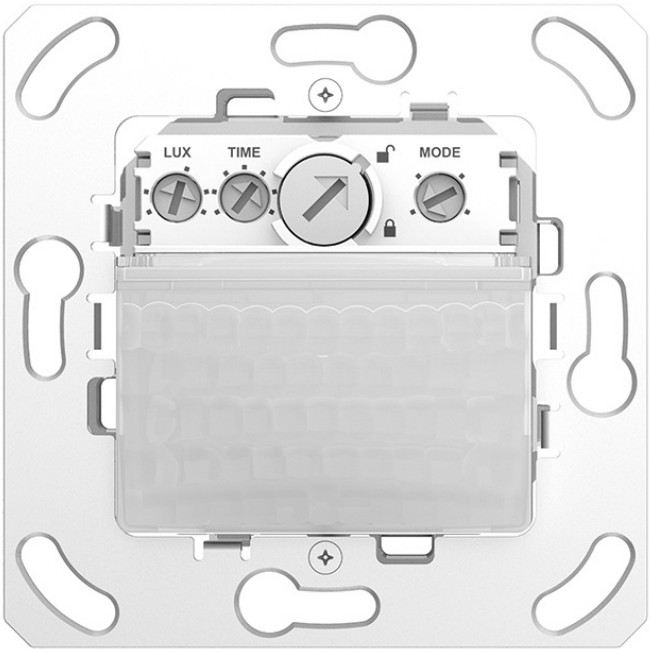


## Technical data

| | theMura S180-101 B UP |
|---|---|
| Operating voltage | 230 V AC |
| Frequency | 50 - 60 Hz |
| Installation height | 0.8 - 1.2 m |
| Installation type | Wall installation, Flush-mounted |
| Colour | White |
| Switching output | Light \| Presence |
| Power consumption | ~0.4 W |
| Light measurement | Mixed light measurement |
| Setting range brightness | 5 - 3000 lx |
| Light switch-off delay | Impuls, 10 s - 60 min |
| Lamp types | Incandescent/halogen lamps, fluorescent lamps, Energy saving lamps, LEDs |
| Incandescent/halogen lamp load | 2300 W |
| Inrush current | max. 600 A / 200 µs |

| | theMura S180-101 B UP |
|---|---|
| LED lamp < 2 W | 40 W |
| LED lamp 2-8 W | 450 W |
| LED lamp > 8 W | 450 W |
| Switch-on delay presence | 0 s - 10 min |
| Presence switch-off delay | 10 s - 120 min |
| Switching capacity presence | 50 W/50 VA |
| Type of connection | Spring terminals |
| Size of concealed housing | 55 mm |
| Detection range | 238 m² (14 x 17 m) |
| Detection angle | 170° |
| Ambient temperature | -15°C ... 45°C |
| Type of protection | IP 20 |
| | |
| | |

## Connection example

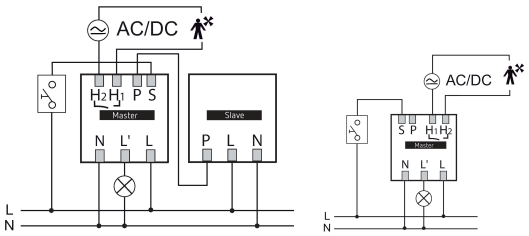


## Detection range for planning applications at a temperature of 21 °C

| Mounting height (A) | Head on to (R) | Diagonally (t) | Sitting (S) |
|---|---|---|---|
| 1.2 m | 120 m² \| 12 m x 10 m | 238 m² \| 14 m x 17 m | |

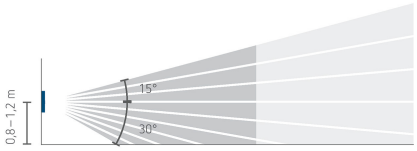


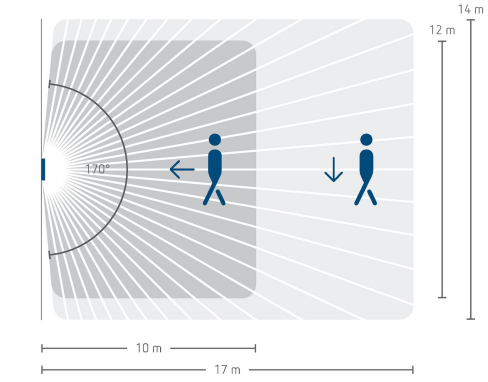

## Scale drawings

theMura S180-100 UP WH (2060650) + theMura S180-101 UP WH (2060655)

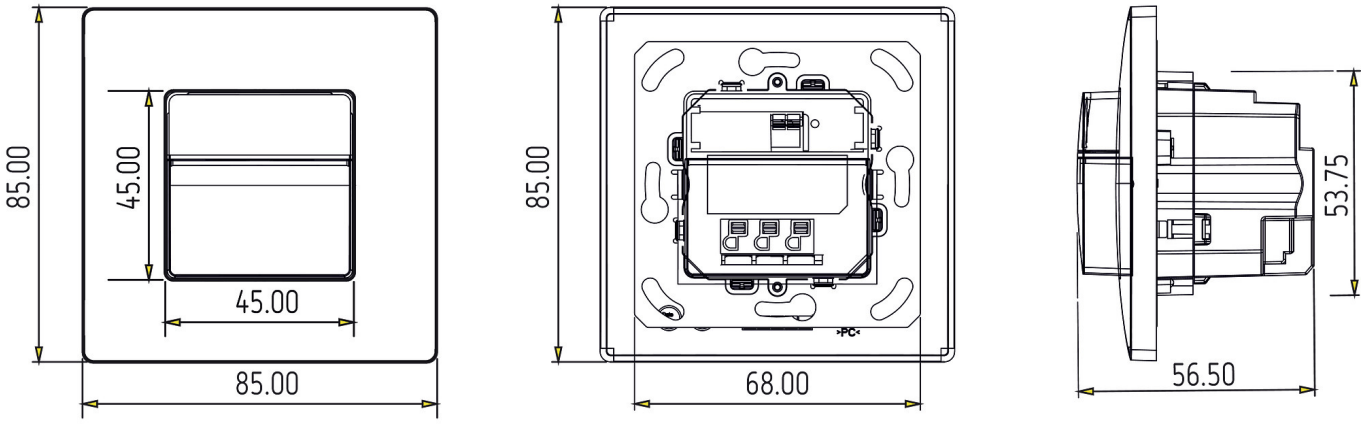


theMura S180-100 UP (2060750) + theMura S180-101 B UP (2060755)

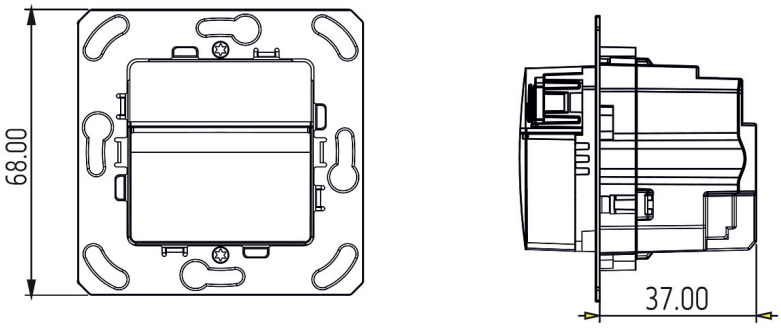


## Accessories

**theSenda P**
Item no.: 9070910



**theSenda S**
Item no.: 9070911



**Surface frame LUXA 103-200**
Item no.: 9070504

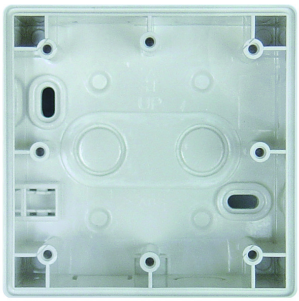

**theSenda B**
Item no.: 9070985



## Accessories

**Adapter frame 45A BJBSI WH**
Item no.: 9070788

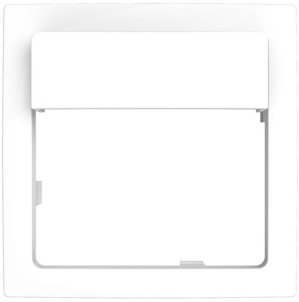

**Adapter frame 45A MMP WH**
Item no.: 9070790



**Adapter frame 45A GS WH**
Item no.: 9070791



**Adapter frame 45A JAS WH**
Item no.: 9070789



**Adapter frame 45A BS WH**
Item no.: 9070792



**Cover frame theMura Theben WH**
Item no.: 9070798

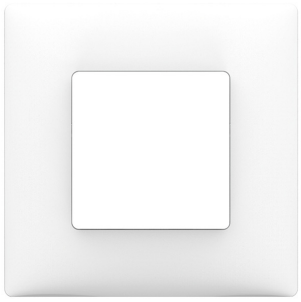

**Cover frame theMura FED WH**
Item no.: 9070786

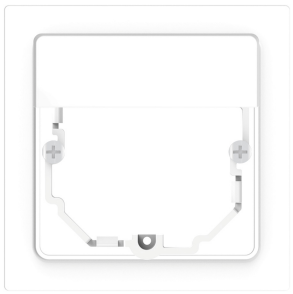

**Cover frame theMura LM WH**
Item no.: 9070787

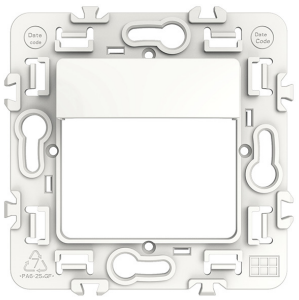

**Adapter frame 45A BJRE WH**
Item no.: 9070754



**Adapter frame 45A MEMP CL**
Item no.: 9080004



**Adapter frame 45A GIST CL**
Item no.: 9080005



**Adapter frame 45A BESI CL**
Item no.: 9080006



## Accessories

**Adapter frame 45A BJBA CL**
Item no.: 9080002



**Adapter frame 45A JUAS CL**
Item no.: 9080003



**Adapter frame 45A BJRE CL**
Item no.: 9080001



**Adapter frame 45A FEED CL**
Item no.: 9080007

