VL D01 10A 1p



Specifications

ETI Code	002261002
Description	VL D01 10A 1p
Class name	Fuse switch disconnector
Rated current (A)	10
Type	VLD01 10A 1P
Size	D01
No. Of poles	1
Product group	LV-fuse disconnector
Rated AC voltage (V)	230/400
Utilization category	AC 22A
Mounting	35mm DIN rail

Online product page

Other documentation

Technical data catalogue
Certificate
3D Model
Instruction manual
CE declaration

ETIM international clasification

Classification	EC000277
Class name	D0-system switch disconnector
Construction size	D01
Max. rated operation voltage Ue AC	230/400
Mounting method	35mm DIN rail
Nominal rated current	10A
Nominal rated voltage	230V
Number of knife blade fuse holders	1
Number of poles	1

Dimension drawing

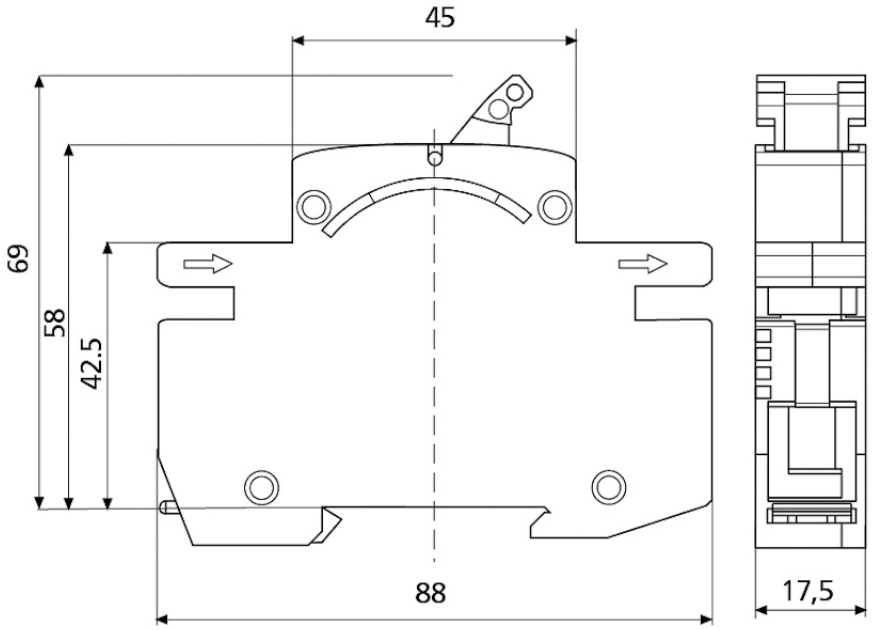

	B [mm]
1p	17,5
1p+N	35
2p	35
3p	52,5
3p+N	70