DATA SHEET

KPZ-1 - fire resistant instrument wall box

www.kopos.com

type number: **KPZ-1_PO**

material: PP (halogen-free, pb-free) + foaming material

color: black - grey

69dB

product description: Fire resistant wall box KPZ-1_PO is designed for fire partition walls, consisting of fire resistant gypsum plasterboard or aerated concrete structures.

The box is designed for electrical wiring with voltage up to 400 V.

Its advantage is that the inlet openings are made of a softened material that ensures airtightness of the passage between the box and the cable or tube installed therein.

Marked inputs in the flexible material (4x Ø20 mm).

On the outside and inside of the box is applied foaming material, which in case of fire foams the mounting hole. This ensures the integrity and insulation fire partitions in place of location devices. Its use thus prevents the spread of fire in the event of fire.

Drill diameter for installation is 73 mm.

The triple-threaded mounting screws are provided with metal feet for quick installation.

Application of this box is mainly in buildings with increased need for protection of persons and property in case of fire.

The PO classification is dependent on the specific placement of the box in plasterboard or aerated concrete, detailed in the new catalog – Systems with maintained functionality in fire.





self-snuffing: yes, within 30 s

temperature resistance: -5 - +60 °C (activation of foaming material from 200 °C)

flaming loop test: 850 °C

fire class for underlying material: A1-F

sales amount: á 1 ks

classification: EI 15 - EI 120

ČSN EN 1363-1

ČSN EN 1364-1

ČSN EN 1366-3

ČSN 73 0810

storage: ČSN 60721-3-1

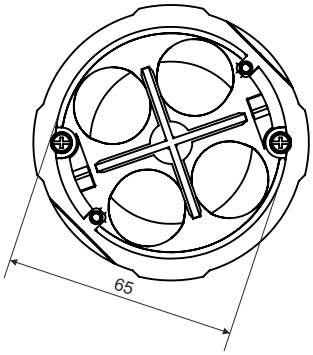

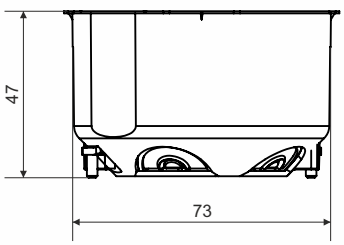

3-16/04/2026 KOPOS KOLÍN a.s., Havlíčkova 432, 280 02, Kolín IV, Česká republika

⚠ WARNING

Incorrect installation

Improper fitting into a fire-resistant partition may lead to a loss of fire resistance.

Damage during installation

Mechanical damage of the seal or internal components may reduce the ability to prevent the spread of fire and smoke.

Safe Use

Under normal and foreseeable conditions of use, there are no risks to consumers, provided that proper installation and usage are carried out in accordance with the installation manual.

recycling codes:

KPZ-1

20 PAP cardboard

3-16/04/2026 KOPOS KOLÍN a.s., Havlíčkova 432, 280 02, Kolín IV, Česká republika