DATA SHEET

KPL 64-50/LD - junction box

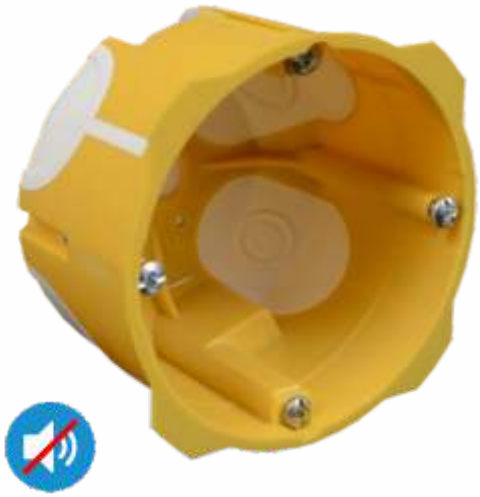

69dB

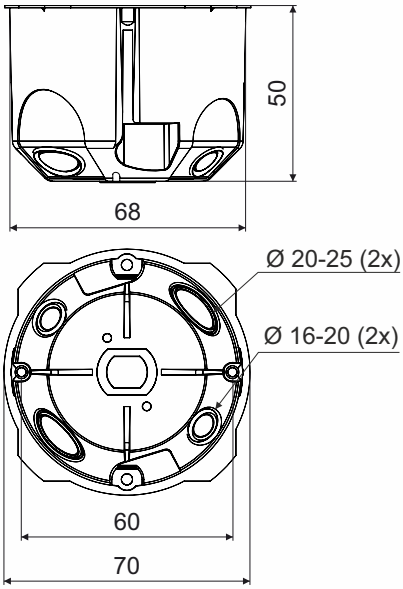

product description:

- designed for distribution system with voltage 400 V and with maximum current 16 A
- designed for mounting into hollow walls (eg. walls of plasterboard)
- inlet openings made of flexible material
- marked inputs for sealing pipes in the flexible material (2x Ø 16-20 mm, 2x Ø 20-25 mm)
- air-tightness even with inserted pipe
- suitable for low energy and passive houses
- prevents airflow through the installation
- mounting screws with plastic foot are fitted with a twin self-tapping thread for quick installation
- instrument screws are tightened below the edge of the box
- extended edge situated for easy overlay installed device
- when mounting, it is not necessary to countersink the plasterboard edge
- possibility to insert screwless terminals
- when using box with the cover V 68, the IP protection is IP 30
- suitable for soundproof walls with maximum soundproofing Rw = 69dB

material: PVC (Pb Free)

color: yellow

self-snuffing: yes, within 30 s

temperature resistance: -5 - +60 °C

flaming loop test: 850 °C

fire class for underlying material: A1-F

weight: 25 g

meets the requirements: ČSN EN 60670-1, ČSN EN IEC 60670-1 ed. 2:21

storage: ČSN 64 0090

KPL 64-50/LD_NA - boxes fitted with screws for mounting into double wall and device screws - package: 110 pcs boxes loose in cardboard

accessories:

- cover V 68
- screwless terminal plates TYP015, TYP016, TYP017, TYP018

auxiliary tools:

- saw-drill VPT 64
- universal carrier VPTU

recycling codes:



box



feet



screws



carton

WARNING

risks associated with using the products:

incorrect electrical installation can cause a fire - we recommend the connection to be carried out exclusively by an authorized person

follow the manufacturer's installation instructions according to the installation instructions and videos

damage to the product - if the box is visibly damaged, stop using it

make sure the box is properly attached and secured to prevent accidental loosening

installing an unsuitable box can negatively affect the sound and thermal insulation of the room

under normal and foreseeable conditions of use, the installed box does not pose any risks to consumers