EVPS 20 HF LG

Pressure compensation unit, polyamide, RAL 7035, M20



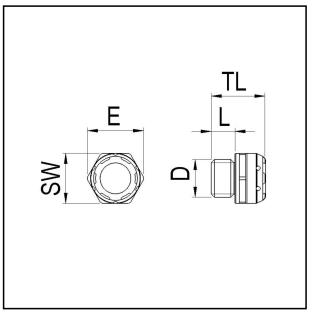

Products may differ in size, colour and appearance to those shown. If you require further information or customisation, please contact us directly.

RoHS

Material cable gland	Polyamide
Material membrane	ePTFE
Material sealing gasket	Silicone
Airflow at 70mbar	280 l/h
Temp. range min	-40 °C
Temp. range max	100 °C
Glow wire test	750 °C
Protection class	IP66 / IP68
Thread type	M
Ø Connection thread D	20
Lead	1,5
Length screw-in thread L	9 mm
Key width SW	24 mm
Collar diameter (E)	27 mm
Tightening torque	2 N m
Total length TL	15,4 mm
Product Color	RAL 7035
Order no. RAL 7035	10106615
Type	EVPS 20 HF LG
Packing unit	10
EAN number	4007686024814
Tariff number	39269097
ETIM-Classification	EC000441

Your Contact:
WISKA Hoppmann GmbH
Kisdorfer Weg 28 · 24568 Kaltenkirchen · Germany
☎ +49-4191-508-0 · 🖷 +49-4191-508-209
contact@wiska.de · www.wiska.com

Other technical data on request / subject to change without notice

Recommended accessories

EMUG 20 LG	10060772

03.06.2026

Your Contact:
WISKA Hoppmann GmbH
Kisdorfer Weg 28 · 24568 Kaltenkirchen · Germany
☎ +49-4191-508-0 · 🖷 +49-4191-508-209
contact@wiska.de · www.wiska.com

Other technical data on request / subject to change without notice

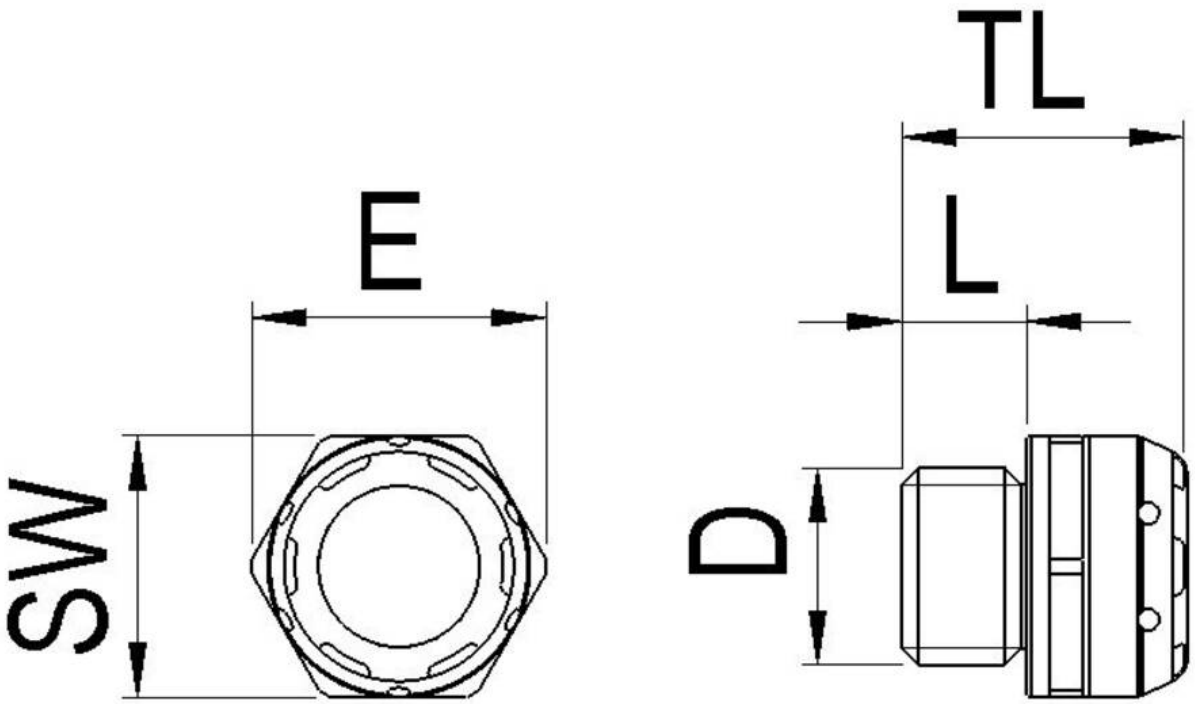

Your Contact:
WISKA Hoppmann GmbH
Kisdorfer Weg 28 · 24568 Kaltenkirchen · Germany
☎ +49-4191-508-0 · 🖷 +49-4191-508-209
contact@wiska.de · www.wiska.com

Other technical data on request / subject to change without notice