Manual

Elma 6660 Process Multimeter

EAN: 5706445874019

ENGLISH

elma instruments

⚠Warning

THIS IS AN IEC SAFETY CLASS 1 PRODUCT. THE GROUND WIRE IN THE LINE CORD MUST BE CONNECTED FOR SAFETY.

WARRANTY

Our company warrants to the original purchaser that each product it manufactures will be free from defects in material and workmanship under normal use and service for a period of one year from date of purchase. Our company's warranty does not apply to fuses, test leads or any product which, in our company's opinion, has been misused, altered, or damaged by accident or abnormal conditions of operation or handling.

To obtain warranty service, contact the nearest Service Center or send the product, with a description of the difficulty, and postage prepaid, to the nearest Service Center. We assume no risk for the damage in transit. We will, at its option, repair or replace the defective product free of charge or refund your purchase price. However, if we determine that the failure was caused by misuse, alterations, accident or abnormal condition of operation or handing, you will be billed for the repair and the repaired product will be returned to you transportation prepaid.

SHIPPING TO MANUFACTURER FOR REPAIR OR ADJUSTMENT

All shipment of our company's instruments should be made via United Parcel Service or "Best Way" prepaid. The instrument should be shipped in the original carton; or if it is not available, use any suitable container that is rigid and of adequate size. If a substitute container is used, the instrument should be wrapped in paper and surrounded with at least four inches of excelsior or similar shock-absorbing material.

CLAIM FOR DAMAGE IN SHIPMENT TO ORIGINAL PURCHASER

The instrument should be thoroughly inspected immediately upon original delivery to purchaser. All material in the container should be checked against the enclosed packing list. The manufacturer will not be responsible for shortages against the packing sheet unless notified immediately. If the instrument is damaged in any way, a claim should be filed with the carrier immediately.

To obtain a quotation to repair shipment damage, contact the nearest Service Center. Final claim and negotiations with the carrier must be completed by the customer.

Contents

Brief introduction 1
General description 1
Open-package inspection 1
Safety warning 2
Symbols 2
Understanding of the meter 3
Starting up 3
Automatic shutdown 3
Display of low battery power 3
Turn on the backlight 3
Automatically turn off the backlight 3
Meter panel 4
Rotary switch 4
Buttons 5
Display screen 6
Input and output plugholes 8
Application of Display HOLD 9
Application of relative measurement (REL) 9
Range selection 10
Speed selection 11
Use of the meter 11
The measuring function of the meter 11
Measurement of AC voltage 11
Measurement of VFC voltage 11
Measurement of DC voltage 11
Measurement of DCmV voltage 12
Measurement of resistance 12
On-off test 12
Measurement of diodes 13
Measurement of capacitance 13
Measurement of thermocouples (TC) 14
Measurement of thermal resistance (RTD) 15
Measurement of DC current 15
Measurement of AC current 15
Measurement of loop current 15
Measurement of loop current with 250Ω HART resistance 16
Output functions of the meter 16

Current output 16
Constant current output (SOURCE mode) 17
Constant current output (SIMULATE mode) 18
Voltage output 19
Thermocouple output 19
Frequency output 20
Simulated output of resistance and thermal resistance (RTD) 20
Modification of meter settings 21
Brief introduction 21
Selection of setting items 21
Meter maintenance 23
General maintenance 23
Battery replacement 24
Fuse replacement 25
Technical specification 27
Safety and conformity 27
General characteristics 27
Detailed precision indexes 29
Detailed precision indexes for output 32
Input characteristics 35
Notice of the Instruction Manual 35

Change log

Date/issue	Responsible	Description
2025-09-15	SMK	First issue.

Chapter one

Brief introduction

⚠Warning

Please read this manual carefully before using the meter.

General description

This meter is an industrial, battery-powered instrument for field maintenance, an integration of a digital multi-meter and process signal sources.

It conforms to safety standards of 600V CAT.IV and 1000V CAT.III defined in IEC 61010-1Safety Requirements for Electrical Equipment for Measurement, Control, and Laboratory Use.

It is designed with a dual-color plastic enclosure of IP65, for application in harsh environment.

It has the following functions:

- Measurement functions:
  Measurement of AC voltage, DC voltage, Ohm, capacitance, DC current, AC current, on-off, diodes, frequency, thermocouples, thermal resistance;
  Built in VFC low-pass filter can accurately measure distorted voltage and variable frequency voltage.
  Data display and retention;
  Measurement of relative values
- Output functions:
  Output of DC voltage, resistance, frequency, thermocouples, thermal resistance, and DC current (constant output, manual stepping and SIMULATE);
- Loop inspection: supply power to 24V circuits and meanwhile measure current; with built-in250 Ω HARTloop resistance.

Open-package inspection

Check the product to find out whether it is damaged during transportation. Check the completeness of the product, and keep package materials well for future transportation.

Standard accessories, as well as optional ones, of the meter are listed below. Optional accessories can be purchased as needed.

Standard accessories:

• One pair of testing wires (including an alligator clip)

• One operating manual

• Four 1.5V alkaline cells (LR6)

• One 500mA/250Vquick-acting fuse

• One soft portable bag

Optional accessories:

• One power adapter（DC5V）

Safety warning

This meter is designed, produced and inspected as per IEC 61010-1. This manual contains warning issues and safety regulations that users must obey to guarantee safe application and working status of the meter. Please read the following instructions before use.

The label ⚠ marked on the meter means that the meter must be operated according to relevant instructions in this manual for safety purposes.

Warning refers to an activity that may endanger the user;

Caution refers to an activity that may damage the meter or the tested equipment;

Notice refers to necessary understanding of meter operations and characteristics. Please see table 1-1 for explanation of international symbols adopted on the meter and in the manual.

Symbols

Please see table 1-1 for explanation of international symbols adopted on the meter and in the manual.

Table 1-1 International symbols

Symbol	Meaning	Symbol	Meaning
~	AC	⏚	Grounding
⎓	DC	▭	Fuse
≂	AC and DC	⧈	Double insulation
⊐	Battery		
CAT III	Overvoltage category three, with pollution grade two (as per IEC 61010) refers to protective electrical level of supplied impulse withstand voltage. Typical installation positions include: equipment with fixed three-phase distribution circuits (including single commercial lighting circuit); lighting equipment and lines inside large-scale buildings; industrial field equipment.		
CAT IV	Overvoltage category four, with pollution grade two (as per IEC 61010) refers to protective electrical level of supplied impulse withstand voltage. Typical installation positions include: any outdoor supply line or device of three-phase public power supply units; any outdoor power transmission line; equipment for front-side overcurrent protection of power meters.		

Chapter two

Understanding of the meter

Please study this chapter to understand various characteristics and functions of the meter.

Starting up

Please turn the rotary switch to any function position in order to start the meter.

When power is on, the meter will conduct self-inspection and display relevant information on the screen, before relevant operations are carried out.

⚠Notice

Power on: to ensure correct power-on operations, the meter should only be restarted after the power is off for 5 seconds.

Automatic shutdown

It is defined by default that the power will be automatically switched off if no operation is conducted to the meter within 5 minutes.

After the meter is automatically switched off, please turn the rotary switch to the OFF position before restarting the meter.

The function of automatic shutdown can be set by users themselves (refer to Chapter three “Setting of functions”)

Note: automatic shutdown will consume current of about 300uA. Therefore, it is recommended that the rotary switch be turned to the OFF position when the meter is not used.

Display of low battery power

The symbol  shown on the screen means low battery power. Please replace the battery as soon as possible.

⚠Warning

To avoid electric shock or personal injury due to incorrect readings, please replace batteries immediately when the symbol  is shown on the screen.

Turn on the backlight

Press the ⊛ key to turn on the backlight, and press the ⊛ key again to turn off the backlight.

Automatically turn off the backlight

The meter is set at the factory so that if the user does not turn off the backlight of the meter within 60 seconds, the meter will automatically turn off the backlight. Whether to use the auto-off backlight function can be set by the user (see Chapter 4 "Setting Function").

Meter panel

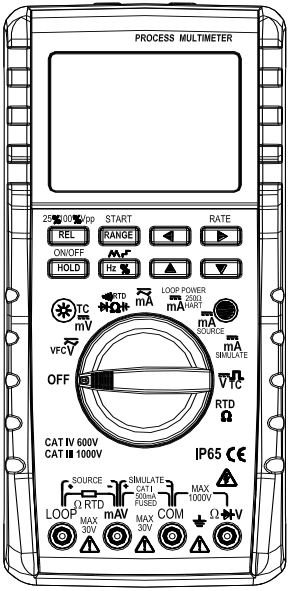

Figure 2-1 Meter panel

Rotary switch

Turn the rotary switch to any function position to start the meter. And then, the meter will give a standard display of this function on the screen.

Measurement functions are marked with white characters while output functions are marked with yellow ones.

Select functions marked in blue on the rotary switch with the blue button.

When the rotary switch is turned to a new function position, information on the new function will be shown on the screen. Settings for a function are only applicable to this function, and will not influence any other function.

Figure 2-2 shows the rotary switch. Descriptions of relevant positions are listed in table 2-1.

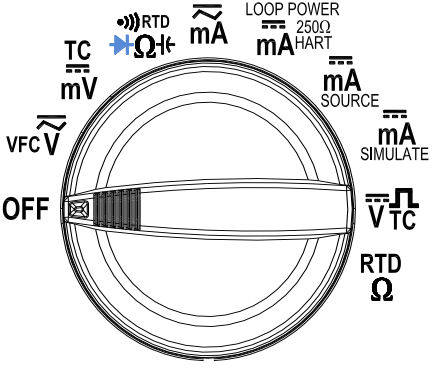

Figure 2-2 Rotary switch

Table 2-1 Rotary switch

Pos.	Rotary switch function	Blue button function
VFC V	Measurement of DC voltage (DCV)	Measurement of AC voltage (ACV) Measurement of AC voltage (VFC)
TC mV	Measurement of DC millivolt voltage (DCmV)	Measurement of thermocouples (TC)
RTD Ω	Resistance measurement	Measurement of diodes, on-off, capacitance, thermal resistance
mA	Measurement of DC current (DCmA)	Measurement of AC current (ACmA)
LOOP POWER 250Ω mA HART	Measurement of loop current (loop power supply)	Measurement of loop current (loop power supply, with 250Ω HART resistance)
mA SOURCE	Current output	None
mA SIMULATE	Simulated transmitter	
V TC	Output of DC voltage	Output of frequency and thermocouples
RTD Ω	Output of resistance	Output of thermal resistance

Buttons

Buttons are shown in figure 2-3. Relevant descriptions are shown in table 2-2.

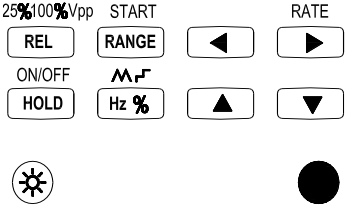

Figure 2-3 Buttons

Table 2-2 Buttons

Button	Description
START RANGE	Under measurement: push this button to exit from the automatic mode (AUTO) and enter into the manual range mode; under the manual mode, select an input range and keep pressing the button for at least 2 seconds to enter the automatic range mode. Under the voltage and frequency output: select a fixed output range. Under thermocouple and thermal resistance output: select an indexing number. Under current output: start and stop automatic output of current waveforms.

25%100%Vpp REL Δ	Under measurement: press this button to save the current reading as an error reference value. Subsequent readings are difference values with respect to this reference value; press again the button to show adifference value in percentage; then press it again to exit. Under output: for non-automatic output of current waveforms, select the mode of 25%, 100% or digit-setting output. Under frequency output: switch over the display of amplitude of output frequency.
ON/OFF HOLD	Under measurement: for data retention. Under output: output connected (displaying ON) or disconnected (displaying OFF)
M⌐¬ Hz %	Under ACV measurement: select the measurement of frequency or duty cycle. Under output: for output of automatic current waveforms, select the mode of automatic ramp M, automatic stepping ⌐¬, or digit-setting output. Under frequency output: switch over the display of output frequency values.
◄	Select leftwards the output setting digit;
RATE ►	For digit-setting output:Select rightwards the output setting digit; Under measurement: change measuring speed. Under output:
▲	For digit-setting output: increase the value of a setting digit; For stepping output: every time the button is pressed, the output will be stepped up linearly by 25% or 100%.
▼	For digit-setting output: decrease the value of a setting digit; For steeping output: every time the button is pressed, the output will be stepped down linearly by 25% or 100%.
●	Select the blue-button function

Display screen

Figure 2-4 and table 2-3 are for description of the display screen.

Figure 2-4 Display screen

Table 2-3 Display screen

Display	Description
MEASURE	The meter works under the measurement mode
SOURCE	The meter works under the output mode
AUTO	The meter works under the mode of measurement with an automatic range
HOLD	Measurement data retention
SIMULATE	The meter works under the simulated transmitter mode.
	Battery low
	Power supply by the adapter
250ΩHART	250Ω HART resistance
LOOP	Start the loop power of 24V
RUN	Start automatic waveform output
VFC	low pass filtering
F S	Under measurement: show measuring speed (fast or slow)
OFF ON	Under output: indicate connected output (ON) and disconnected output (OFF)
AC DC	Alternate and direct current
Ω、kΩ、MΩ	Units of resistance: ohm, kilohm and megohm
Hz、kHz	Units of frequency: hertz, kilo-hertz and megahertz

mA	Units of current: ampere, milliampere and microampere
V、mV	Units of voltage: volt and millivolt
nF、μF	Units of capacitance: nanofarad, microfarad
°C、°F	Celsius (default) or Fahrenheit
%	Relative measurement (REL) to show relative percentage
▲▲▲▲▲	Output setting digit
K、E、J、B、T、N、R、S	Indexing of thermocouple (TC)
Pt100、Pt1000、Cu50	Indexing of thermal resistance (RTD)
CAL 0FS	Calibration mode
%kΩ°C mA °F	Auxiliary display units
-8.8.8.8	Auxiliary display
25% 100%	Under the output mode: it means 25% or 100% stepping output of
	DCmA
FS	Fast or slow automatic stepping and ramp output of current
RJ-M	Thermocouple cold junction manual compensation
RJ-A	Thermocouple cold junction automatic compensation
	Under measurement: test on and off; Under measurement: test diodes
△	Under measurement: measure relative values.
-8.8.8.8	Main display
	Under measurement: indicate input voltage is higher than 30V

Input and output plugholes

Figure 2-5 and table 2-4 are for description of input and output plugholes.

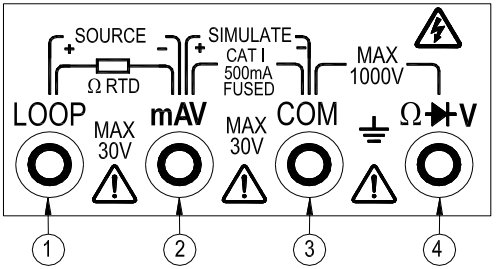

Figure 2-5 Input and output plugholes

Table 2-4 Input and output plugholes

No.	Plughole	Description
1	LOOP	Input point for loop power supply; Negative terminal for resistance and thermal resistance output
2	mA	Input for current measurement; Common point for DC current output; Common point for loop power supply; For output of a simulated transmitter (in series withexternal power supply) Positive terminal for voltage and thermocouple output; Positive terminal for resistance and thermal resistance output; With 500mA fuse protection
3	COM	Common point for all tests; Common point for simulated transmitter output
4	VΩ⊣⊢	Test terminal of voltage up to 1000V, Ω, capacitance, frequency, thermocouple, thermal resistance, diode and on-off.

Application of Display HOLD

When the meter is under the measurement mode, press the ON/OFF HOLD button to enter the mode of display hold. Then the meter will keep current readings in the display zone unchanged (the symbol HOLD will be shown on the screen). Press again the ON/OFF HOLD button to exit from display hold.

Application of relative measurement (REL)

When the meter is under measurement, selection of the relative mode will make the current reading kept as a reference value for subsequent measurement,and then make it reset to be zero.

- Press the button 25%100%Vpp REL once to select the relative

mode (if the current display is “OL”, the relative mode can’t be selected). After entering the relative mode, the meter will start the manual range mode.

The reference value will be displayed on the auxiliary screen, while the main screen will show the difference between the new measurement reading and the reference value.

- Press again the button 25%100%Vpp REL to show the percentage of relative values. The auxiliary screen will show the reference value, while the main screen will display the percentage of difference between the current measurement reading and the reference value, which is:

$$REL\% = \frac{\text{Current reading - reference value}}{\text{Reference value}} * 100\%$$

Under the relative mode (REL %), the screen will show △%.

- Press the button 25%100%Vpp REL for the third time to exit from the relative mode.

⚠Warning

Please be careful under the REL mode, due to the possible existence of dangerous voltage.

Range selection

Under the measurement mode of the meter, press the button START RANGE to select a fixed range.

When a new function is switched on, the meter will adopt the automatic range mode by default (with the symbol AUTO on the screen). Under the automatic range, the meter will select a range as low as possible to guarantee the most precise readings (highest resolution ratio).

If the meter is under the automatic range mode (AUTO), press the button START RANGE toswitch it to the manual range (current range). Then, press again the button START RANGE to select a new range. Keep pressing the button START RANGE for at least 2 seconds to recover the meter to the automatic range mode (AUTO).

Notice

Under functions of diodes, on-off test, capacitance, frequency and duty cycles, pressing the button START RANGE will not be valid. RTD and TC are only prepared with manual ranges.

Under the output functions, as to voltage and frequency

output, press the button START RANGE to select a fixed output range; as to thermocouple and thermal resistance output, press the button START RANGE to select an indexing number.

Speed selection

Slow measurement is adopted by default. Under measurement, press the button RATE ▶ to change the measurement speed.

Chapter three

Use of the meter

This chapter introduces how to use the meter.

Most functions can be selected for use through the rotary switch.

White characters beside the rotary switch indicate the major functions, while blue ones indicate the alternative functions. Such alternative functions can be applied by pressing the blue button.

The measuring function of the meter

MEASURE is displayed in the upper left corner of the screen.

Measurement of AC voltage

1. Turn the rotary switch to the position of "VFC V≂" and then press the blue button to choose the function of measuring AC voltage;
2. Plug the black probe into the plughole of "COM" and the red probe into "Ω⊣◀V".
3. Connect probes to the circuit to be measured, and read the stable measurement data.
4. Press the button Hz % to display frequency and duty cycle of the signal to be measured.

Measurement of VFC voltage

1. Turn the rotary switch to the position of "VFC V≂" and then press the blue button to choose the function of measuring VFC voltage;
2. Plug the black probe into the plughole of "COM" and the red probe into "Ω⊣◀V".
3. Connect probes to the circuit to be measured, and read the stable measurement data.

Measurement of DC voltage

1. Turn the rotary switch to the position of "VFC V≂";
2. Plug the black probe into the plughole of "COM" and the red probe into "Ω⊣◀V".

3. Connect probes to the circuit to be measured, and read the stable measurement data.

⚠Warning

- Don't input voltage higher than DC 1000V or AC 750Vrms. It is possible to show higher voltage, but with risks of damaging the meter.

- In the case of input voltage higher than 30V, the screen will show the symbol of ϟ as a safety warning.

Measurement of DCmV voltage

1. Turn the rotary switch to the position of "TC mV".

2. Plug the black probe into the plughole of "COM" and the red probe into "Ω⏩V".

3. Connect probes to the circuit to be measured, and read the stable measurement data.

Measurement of resistance

⚠Warning

To avoid damage to the meter as well as to the equipment under test, cut off all the power supply of the circuit and discharge all capacitors completely, before measurement of resistance.

1. Turn the rotary switch to the position of "RTD Ω"

2. Plug the black probe into the plughole of "COM" and the red probe into "Ω⏩V".

3. Connect probes to the circuit to be measured, and read the stable measurement data.

⚠Notice

- When the resistance to be measured is in an open circuit, or it is beyond the maximum range of the meter, the screen will show OL.

- As the output test current of the meter passes through all possible paths between probes, the resistance measured normally differs from its rated value.

On-off test

⚠Warning

To avoid damage to the meter as well as to the equipment under test, cut off all the power supply of the circuit and discharge all capacitors completely, before on-off testing is conducted.

1. Turn the rotary switch to the position of "RTD Ω", and press the blue button to select the function of on-off test;

2. Plug the black probe into the plughole of “COM” and the red probe into “Ω⏥V”.

3. Connect probes to the circuit under test. If the circuit is connected (with resistance lower than about 50Ω), the buzzer beeps.

Measurement of diodes

⚠Warning

To avoid damage to the meter as well as to the equipment under test, cut off all the power supply of the circuit and discharge all capacitors completely, before measurement of diodes.

1. Turn the rotary switch to the position of “RTD Ω⏥”, and press the blue button to select the ⏥ measurement;

2. Plug the black probe into the plughole of “COM” and the red probe into “Ω⏥V”.

3. Connect probes to the diode to be measured, and read the stable measurement data.

Forward test: connect the red probe to the positive pole of the diode under test and the black probe to the negative pole. The screen shows the approximate forward voltage drop, normally about 0.5～0.8V.

Reverse test: connect the red probe to the negative pole of the diode under test and the black probe to the positive pole. In normal cases, the screen will show OL.

Measurement of capacitance

⚠Warning

To avoid damage to the meter as well as to the equipment under test, cut off all the power supply of the circuit and discharge all capacitors completely, before measurement of capacitance.

Capacitance indicates the capacity of an element to store electric charges. The unit of capacitance is farad (F), and most capacitors have values from the nanofarad (nF) level to the microfarad (μF) level.

Please measure capacitance according to the following steps:

1. Turn the rotary switch to the position of “RTD Ω⏥”, and press the blue button to select the measurement of capacitance;
2. Plug the black probe into the plughole of “COM” and the red probe into “Ω⏥V”.
3. Connect probes in parallel with the capacitor under

test, and then read the measurement data on the screen.

⚠Notice

- When the capacitance to be measured is in an open circuit, or it is beyond the maximum range of the meter, the screen will show OL.
- In the case of measurement of polarized capacitors, connect the red probe with the positive pole and the black probe with the negative pole.
- It takes longer time to measure large capacitance.
- In order to improve measurement precision of low capacitance, firstly make probes open-circuited and then press the button REL to select the function of relative value measurement, so as to automatically subtractstray capacitance of the meter and wires in the measuring result.
- Residual voltage, insulation impedance, dielectric absorption, etc. of capacitors may cause measurement errors.

Measurement of thermocouples (TC)

1. Turn the rotary switch to the position of "TC mV", and press the blue button to select measurement of thermocouples (TC).
2. Press the button START RANGE to select relevant indexing number.
3. Plug the thermocouple into plugholes of "COM" and "Ω⏩V" of the meter. Make sure the plug with the + sign of the thermocouple is inserted into the plughole "Ω⏩V".
4. Read the measurement data on the screen.

The main display area displays the temperature value, and the auxiliary display area displays the cold junction temperature value. The user can choose automatic compensation of cold junction temperature (the screen displays RJ-A, and automatic compensation is performed every 10 seconds); or manual compensation of cold junction temperature (the screen displays RJ-M); or can choose to close the cold junction compensation. Whether to open the cold junction compensation is set by the user (see Chapter 4 "Setting Function").

⚠Warning

In order to avoid fire hazard or electric shock, don't connect thermocouples to live circuits.

Measurement of thermal resistance (RTD)

1. Turn the rotary switch to the position of "RTD Ω", and press the blue button to select the measurement of thermal resistance (RTD).
2. Press the button START RANGE to select relevant indexing number.
3. Plug the black probe into the plughole of "COM" and the red probe into "Ω V".
4. Connect probes to the output end of the thermal resistor to be measured;
5. Read measurement data on the screen.

Measurement of DC current

⚠Warning

To avoid damage to the meter as well as to the equipment under test, make sure positions of the rotary switch and the input terminals of probes are consistent with the required measurement mode.

1. Turn the rotary switch to the position of "mA ";
2. Plug the black probe into the plughole of "COM" and the red probe into "mAV".
3. Connect probes to the circuit to be measured, and read the stable measurement data.

Measurement of AC current

⚠Warning

To avoid damage to the meter as well as to the equipment under test, make sure positions of the rotary switch and the input terminals of probes are consistent with the required measurement mode.

1. Turn the rotary switch to the position of "mA ", and press the blue button to select the measurement of AC current;
2. Plug the black probe into the plughole of "COM" and the red probe into "mAV".
3. Connect probes to the circuit to be measured, and read the stable measurement data.

Measurement of loop current

This function can be used to measure current under constant 24VDC voltage.

The function of 24V loop measurement can be used for measuring the transmitter loop. (The meter can be connected

to the transmitter, instead of connecting the signal regulator or the transmitter to the circuit.)

⚠Warning

The typical loop power supply is 24VDC. Voltage between terminals may exceed 24V, which depends on specific conditions, such as loop current and internal series resistance.

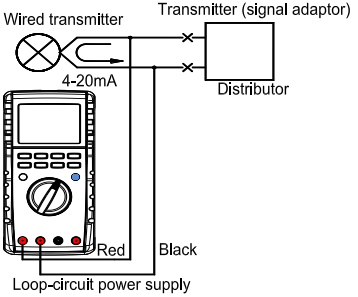

Figure 3-1 Measurement of loop current

1. Turn the rotary switch to the position of LOOP POWER 250Ω mA HART, and the screen will show “LOOP”;
2. Plug the black probe into the plughole of “mAV” and the red probe into “LOOP”;
3. Connect probes to the circuit to be measured, and then read the stable measurement data.

Measurement of loop current with 250Ω HART resistance

1. Turn the rotary switch to the position of “ LOOP POWER 250Ω mA HART ”, and press the blue button to select the function. The screen will show “LOOP” and “250Ω HART”;
2. Plug the black probe into the plughole of “mAV” and the red probe into “LOOP”;
3. Connect probes to the circuit to be measured, and then read the stable measurement data.

Output functions of the meter

Output of simulated resistance, simulated thermal resistance, DC voltage, thermocouple, frequency and currentset by the user can be realized.

SOURCE is displayed in the upper left corner of the screen.

⚠Warning

Don’t apply voltage at the output end, as improper voltage at the output end can cause damage to internal circuits.

Current output

This meter can output DC current of 0~33 mA

Two output modes are available:

SOURCE mode: current comes from the meter.

SIMULATE mode: current comes from external voltage.

Two configuration modes are available:

Constant current output: specified current is output continuously

Manual stepping output: output current is stepped up or down by 25% or 100%.

The SOURCE mode is used for current supply to passive circuits (loops without power supply). It will consume more battery energy to use the meter as current source (the SOURCE mode), compared to the SIMULATE mode, and therefore the SIMULATE mode should be used whenever possible.

⚠Warning

Don't apply voltage of 30V or above on output terminals or electric shock can occur.

In addition, keep voltage between the circuit and the earth below 30V. Be sure to use probes and lead wires originally attached to the meter (check to find out whether they are suitable for relevant measurement).

⚠Warning

Except in the SIMULATE mode, do not apply voltage on output terminals, as improper voltage applied can damage internal circuits.

Constant current output (SOURCE mode)

1. Turn the rotary switch to the position of "mA SOURCE", and the screen will show "SOURCE" and "LOOP". The output is set to be 0mA;
2. Plug the black probe into the plughole of "mAV" and the red probe into "LOOP";
3. Connect the lead wire to the circuit to be measured.
4. Press the button REL (25%100%Vpp) to select the indicative value for non-automatic output of current waveforms, and units of 'mA' and'25%' (or '100 %') will be shown, among which the value for 0 % is 4mA while that for 100 % is 20mA. Under the mode of digit-setting output, press button ◀ or ▶ to select the output setting digit; press button ▲ or ▼ to automatically increase or decrease the setting digit; keep pressing the button for 1 second and after that the value can be changed continuously. Under the mode of 25% (or 100%) output, press the button ▲ or ▼ to change the value of

the setting digit. Press the button ON/OFF HOLD, and 'ON' will be shown before the output value, indicating that current output starts.

5. Press the button Hz % to select the indicative value for automatic output of current waveforms, and units of 'mA', 'SLOW' and 'FAST' (or '⌐¬') will be shown. Press the button ON/OFF HOLD to connect or disconnect output and meanwhile to show 'ON' or 'OFF'. Press the button START RANGE to start or stop the automatic output of waveforms. If automatic waveform output is started, the screen will show 'AUTO', and if it is stopped, the current output value will be held, and the meter will enter the digit-setting output mode.

Constant current output (SIMULATE mode)

When the SIMULATE function is enabled, the meter can take up certain current from the external voltage source through the SIMULATE(+) terminal. The meter can be used to simulate a two-wire transmitter in loop tests.

⚠Notice

The meter can be connected to test a transmitter or a signal regulator, instead of connecting the transmitter.

When current from external power supply is 20mA, keep the voltage within 15~48V.

⚠Warning

Before connecting the test wires to the current circuit, turn the rotary switch to any position of milliampere output. Otherwise, low impedance caused when the rotary switch is at other positions may influence the circuit and bring about current up to 35mA in the circuit.

Please apply voltage according to figure 3-2. Don't connect inversely.

1. Turn the rotary switch to the position of "mA SIMULATE", and the screen will show "SOURCE" and "SIMULATE". The output is set to be 0mA;
2. Plug the black probe into the plughole of "COM" and the red probe into "mAV".
3. Connect the lead wire to the circuit to be measured.
4. Operations of other buttons are the same as those mentioned in constant current output.

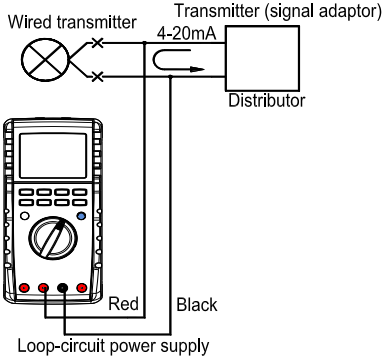

Figure 3-2 Current output in the SIMULATE mode

Voltage output

1. Turn the rotary switch to the position of "V TC", and the screen will show "SOURCE";
2. Plug the black probe into the plughole of "COM" and the red probe into "mAV".
3. Connect the probes to the input end of the user meter;
4. Press the button START RANGE to select a range of 100mV, 1V or 10V;
5. Press the button ◀ or ▶ to select output setting digit; press ▲ or ▼ to change the setting digit which can automatically increase or decrease. Keep pressing the button, and after 1 second, the value can be changed continuously.
6. Press the button ON/OFF HOLD to connect or disconnect the output, and meanwhile to show 'ON' or 'OFF'.

Thermocouple output

1. Turn the rotary switch to the position of "V TC", and press the blue button to select the thermocouple output. Then the screen will show "SOURCE", the unit '°C' and the indexing 'R';
2. Plug the black probe into the plughole of "COM" and the red probe into "mAV".
3. Connect the probes to the input end of the user meter;
4. Press the button START RANGE to select relevant indexing number;
5. Press the button ◀ or ▶ to select output setting digit; press the button ▲ or ▼ to change the setting

digit which can automatically increase or decrease. Keep pressing the button, and after 1 second the value can be changed continuously.

6. Press the button ON/OFF HOLD to connect or disconnect the output, and meanwhile to show 'ON' or 'OFF'.

Frequency output

1. Turn the rotary switch to the position of "V TC", and press the blue button to select frequency output. Then the screen will show "SOURCE" and the unit 'Hz';

2. Plug the black probe into the plughole of "COM" and the red probe into "mAV".

3. Connect the probes to the input end of the user meter;

4. Press the button START RANGE to select the relevant output range: 1～100 Hz, 0.1～1.1kHz , 1.00～6.00kHz and 6.0～11.0 kHz;

5. Frequency value setting:

   Press the button ◀ or ▶ to select the setting digit; press the button ▲ or ▼ to change the setting digit which can automatically increase or decrease. Keep pressing the button and after 1 second, the value can be changed continuously;

6. Press the 25%100%Vpp REL key to enter the frequency amplitude setting mode, the lower part of the display shows that the default amplitude is 1V.

7. Frequency amplitude setting:

   Press the button ◀ or ▶ to select the setting digit; press the button ▲ or ▼ to change the setting digit which can automatically increase or decrease. Keep pressing the button and after 1 second, the value can be changed continuously;

8. Press the 25%100%Vpp REL key again to enter the frequency setting.

9. Press the button ON/OFF HOLD to connect or disconnect the output, and meanwhile to show 'ON' or 'OFF'.

Simulated output of resistance and thermal resistance (RTD)

⚠Notice

Resistance simulation: the meter can generate simulated resistance of 400Ω（or 4kΩ） at the output end (OUTPUT). The way of simulated resistance output is to output voltage "Vx" corresponding to the excitation current "Ix" generated by the meter to be calibrated. As R (setting resistance) = Vx (output

voltage) / Ix (excitation current), the excitation current should be provided by the calibrated object. In order for correct output simulation, the excitation current should be within 0.1mA～3mA.

To ensure the accuracy of the instrument output, it is recommended to use +1mA (400Ω range) excitation and +0.1mA (4kΩ range) excitation.

⚠Notice

Resistance simulation: during calibration of resistance output, the four-wire system is used. If the user uses the two-wire connection, errors due to lead resistance (about 0.1Ω) of the test wire should be considered; if capacitance between the resistance-output terminalof this meter and the meter under test is bigger than 0.1 uF, this meter may generate incorrect resistance.

1. Turn the rotary switch to the position of " RTD Ω ", and the screen will show "SOURCE". Press the blue button to select resistance or thermal resistance (RTD) output, and the screen will show the unit 'Ω' or '°C', as well as the thermal resistance indexing number 'Pt100";
2. Plug the black probe into the plughole of "LOOP" and the red probe into "mAV";
3. Connect the probes to the input end of the user meter;
4. Press START RANGE key to select 400Ω or 4kΩ range;
5. For the thermal resistance (RTD) function, press the button START RANGE to select relevant indexing number;
6. Press the button ◀ or ▶ to select the setting digit; press the button ▲ or ▼ to change the setting digit which can automatically increase or decrease. Keep pressing the button and after 1 second, the value can be changed continuously;
7. Press the button ON/OFF HOLD to connect or disconnect the output, and meanwhile to show 'ON' or 'OFF'.

Chapter four

Modification of meter settings

Brief introduction

Default factory settings can be changed through the modification.

Some settings are general and applicable to all functions, while some are specifically applicable to certain functions.

Selection of setting items

For meter setting, press the button 25%100%Vpp REL when the meter is shut down, and then turn the rotary switch to any position

other than OFF. Under the setting mode, the auxiliary display zone on the screen will show setting items, while the main display zone will show factory defaults. Press the button REL to change setting items, and press the button Hz % to save settings (when the main display zone shows SAVE, the current item is saved successfully).

Shut down the meter after setting is completed.

Table 4-1 Modification of meter settings

Setting item		Function	Default
APoF	Timing for shutdown	The setting range is 0~60 minutes. Use ◀ or ▶ to select the flicker digit, and use ▲ or ▼ to set number of the flicker digit; if the digit is set to be 0, automatic shutdown of the meter will be canceled.	5minutes
bLoF	Setting of backlight time	The setting range is 0~3600 seconds. Use ◀ or ▶ to select the flicker digit, and use ▲ or ▼ to set number of the flicker digit; if the digit is set to be 0, automatic switch-off of backlight will be canceled.	60 seconds
bEEP	Buzzer	Use ▲ or ▼ to select ON or OFF.	ON
tEPU	Settingof the temperature unit	Switchover between °C and °F; use ▲ or ▼ to select	°C

tCrJ	Setting of cold-end compensation for thermocouple (TC)	Use ▲ or ▼ to select ON or OFF.	ON
rJSt	cold junction compensation	Auto(AUto) or manually(mAnU), use ▲ or ▼ to select	AUto
rJ.A	Manual cold junction temperature	The setting range is-10.0℃~50.0℃, Use ◀ or ▶ to select the flicker digit, and use ▲ or ▼ to set number of the flicker digit; if the digit is set to be 0, automatic switch-off of backlight will be canceled.	23.0
FACt	Back to factory defaults	Use ▲ or ▼ to select ON or YES.	NO

Chapter five

Meter maintenance

This chapter introduces some basic maintenance steps. Meter repair, calibration and maintenance that are not covered in this manual should be done by experienced personnel. Please contact service centers authorized by our company for maintenance instructions not mentioned here.

General maintenance

- Clean the meter enclosure with wet cloth and mild detergent on a regular basis. Don't use an abrasive agent or solvent.
- Take out batteries, if the meter is not used for a long time.
- Impurities or moisture in plugholes can influence readings.

Following steps should be observed, for cleaning of connection ports:

(1) Switch off power supply of the meter, and remove all test wires.

(2) Clean impurities at the connection ports.

(3) Clean each connection port with a new swab dipping in alcohol.

Battery replacement

This meter uses four LR6 (AA) alkaline batteries.

⚠Warning

In order to avoid electric shock or personal injury:

- Remove the test wires from the meter, before opening the battery cover.
- Tighten screws on the battery cover, before using the meter.

⚠Notice

- Old batteries can't be mixed with new ones for use.
- Pay attention to the battery direction to make sure batteries are installed according to polarity marks inside the battery box.
- Please take out batteries if the meter is not used for a long time.
- Dispose used batteries based on relevant local rules.

Following steps should be observed for battery replacement (refer to figure 4-1 and 4-2)

1. Turn off this instrument, and disconnect the test wire.
2. Rotate the screws of the battery cover for 1/4 turn counterclockwise via a flathead screwdriver, and remove the battery cover.
3. Install new batteries. Then re-install the battery cover, and lock it by tightening its screws for 1/4 turn clockwise.

Fuse replacement

⚠Warning

Defined fuses should be used to avoid personal injury and meter damage. 500mA/250V quick-acting fuses are used.

The plughole of mAV is protected by a 500mA/250V quick-acting fuse. Following steps should be observed to check whether the fuse is blown:

1. Turn the rotary switch to the position of "mA ";
2. Plug the black test wire into the plughole of "COM" and the red one into "mA";
3. Measure resistance between test wires with an ohmmeter. If the resistance is about 2Ω, the fuse is O.K. If the meter indicates an open circuit, the fuse is blown.

Please take the following steps to replace a fuse. Refer to figure 4-2 if necessary:

1. Turn off this instrument, and disconnect the test wire.
2. Rotate the screws of the battery cover for 1/4 turn counterclockwise via a flathead screwdriver, and remove the battery cover.
3. Carefully pry one end of the fuse, and remove the fuse from its clip.
4. Install a fuse with the same current, voltage, blowing rate, etc.
5. Re-install the battery cover, and lock it by tightening its screws for 1/4 turn clockwise.

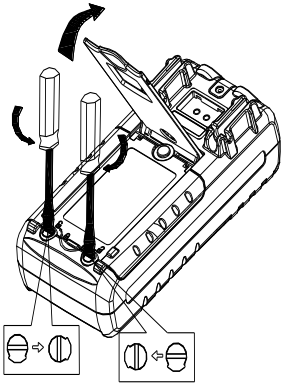

Figure 4-1 Take down the battery door

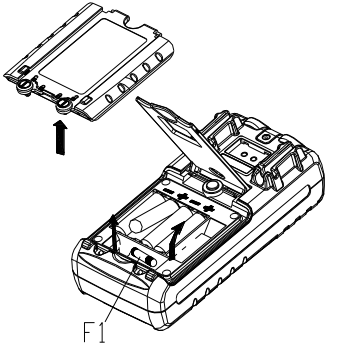

Figure 4-2 Replace the battery and the fuse

Chapter six
Technical specification
Safety and conformity

Overload protection	V~COM terminal：AC1000V/10 seconds mAV terminal：500mA/250V quick-acting fuse
Regulatory compliance	IEC61010-1 (CAT IV 600V, CATIII1000V, pollution level II）
Electromagnetic compatibility	Consistent with Group 1 and Class B of IEC61326-1
Surge protection	8kV (As per IEC61010.1-2001)
Authentication mark	CE
Quality standard	It is developed, designed and produced according to ISO 9001.

General characteristics

Display	Digit: 5-digit display
Display refreshing	Fast (F): 20times/second; slow (S): 5 times/second
Temperature and humidity range for work	0～40 ºC, relative humidity ≤85% (without moisture condensation)
Temperature and humidity range for storage	-20 ºC ～ 60 ºC, relative humidity below 90% (without moisture condensation)
Temperature and humidity range for guaranteed precision	23±5ºC, relative humidity below 75% (without moisture condensation)
Temperature factor	0.1× basic precision / ℃ (temperature range: <18℃or>28℃)
Application environment	Indoors, outdoors (non-watertight), altitude of 0～2000m

Indication of outrange	OL
On-off / open-circuit test	Buzzer beeps indicate the resistance reading is lower than the threshold, or an open circuit
Battery type	Four 1.5V (LR6) alkaline batteries
Service life of batteries	When alkaline batteries are used, For measurement of all parameters: about 100 hours For DC current output (SIMULATE): about 50 hours For DC current output (SOURCE)20mA(load of 1000Ω): about 2.5 hours
Battery low	It is indicated with a battery mark.
Automatic shutdown	The meter is automatically shut down after about 5 minutes of no operation. The time can be adjusted.
Warm-up time	30 minutes
Close the meter enclosure calibration	No need for internal adjustment
Battery cover	For battery replacement, without influencing meter calibration
Size	206 (L)×97 (W)×60 (D)mm
Weight	About 500g
Calibrating period	1year

Detailed precision indexes

Precision is affirmed within one year after calibration, with work temperature of 23±5ºC and relative humidity of 75%.

A precision range can be marked as: ± ([reading%] + count) (Note: “count” means increased or decreased number at the lowest significance digit)

Detailed precision indexes for measurement

Function	Range	Measuring scope	Resolution	Precision
DC voltage DCV	50mV	-55.000mV～55.000mV	0.001mV	0.1%+10
	500mV	-550.00mV～550.00mV	0.01mV	0.05%+5
	5V	-5.5000V～5.5000V	0.0001V	0.05%+5
	50V	-55.000V～55.000V	0.001V	0.05%+5
	500V	-550.00V～550.00V	0.01V	0.1%+5
	1000V	-1000.0V～1000.0V	0.1V	0.1%+5
AC voltage ACV	5V	0～5.5000V	0.0001V	0.5%+4 (<400Hz） 5%+4 (>400Hz）
	50V	0～55.000V	0.001V	0.5%+4
	500V	0～550.00V	0.01V	0.5%+4
	1000V	0V～750.0V	0.1V	0.5%+4
VFC	500V	0～550.00V	0.01V	4%+60

OHM	500Ω	0～550.00Ω	0.01Ω	0.05%+15
	5kΩ	0～5.5000kΩ	0.0001kΩ	0.05%+10
	50KΩ	0～55.000kΩ	0.001kΩ	0.05%+10
	500kΩ	0～550.00kΩ	0.01kΩ	0.05%+10
	5MΩ	0～5.5000MΩ	0.0001MΩ	0.2%+5
	50MΩ	0～55.000MΩ	0.001MΩ	1%+10
DC current DCI	50mA	-55.000mA～55.000mA	0.001mA	0.1%+5
	500mA	-500.00mA～500.00mA	0.01mA	0.1%+5
AC current ACI	50mA	0.000mA～55.000mA	0.001mA	0.15%+20
	500mA	0.00mA～500.00mA	0.01mA	0.15%+10
Frequency FREQ	10Hz	0～9.9999Hz	0.0001Hz	0.02%+4
	100Hz	0～99.999Hz	0.001Hz	0.02%+4
	1000Hz	0～999.99Hz	0.01Hz	0.02%+4
	10kHz	0～9.9999kHz	0.0001kHz	0.02%+4
	DUTY	10%～90%	0.1%	1%
Diode	2V		0.0001V	1%+10

On-off test	500Ω		0.1Ω	≤50ΩBB
Thermocouple TC	R	0°C～1760°C	1°C	0.1%+3°C (≤100）°C 0.1%+2°C (＞100）°C
	S	0°C～1760°C		
	B	600°C～1800°C		0.1%+3°C (≤800）°C 0.1%+2°C (＞800）°C
	K	-200.0°C～1350.0°C	0.1°C	0.1%+2°C (≤-100）°C 0.1%+1°C (＞-100）°C
	E	-200.0°C～700.0°C		
	J	-200.0°C～950.0°C		
	T	-200.0°C～400.0°C		
	N	-200.0°C～1300.0°C		
Thermal resistance RTD	Cu50	-50.0°C～150.0°C	0.1°C	0.1%+1°C
	Pt100	-200.0°C～850.0°C		
	Pt1000	-200.0°C～630.0°C		
Capacitance CAP	10nF	0～11.00nF	0.01nF	5%+50
	100nF	0～110.0nF	0.1nF	5%+5
	1000nF	0～1100nF	1nF	5%+5
	10μF	0～11.00μF	0.01μF	5%+5

	100μF	0～110.0μF	0.1μF	5%+5
	1000μF	0～1100μF	1μF	5%+50

1. AC measurement: true RMS, 20Hz～1kHz, range of 10%～110%;
2. The VFC range: true RMS, 20Hz～1kHz, range of 10%～110%;
3. The thermocouple measurement adopts the thermometric scale of ITS-90. The precision doesn't include errors in cold-end compensation, or influences of thermo-electrical potential.
4. The thermal resistance measurement adopts the thermometric scale of Pt100-385. The precision doesn't include errors due to lead resistance.
5. During frequency measurement, for signals with frequency lower than 3Hz, relevant readings will be zero.

Detailed precision indexes for output

Function	Range	Output setting scope	Resolution	Precision	Remark
DC voltage	100mV	-10.00～110.00mV	10μV	0.05%+3	Maximum output current 0.5mA
	1000mV	-100.0～1100.0mV	100μV	0.05%+3	Maximum output current 2mA
	10V	-1.000～11.000V	1mV	0.05%+2	Maximum output current 5mA
DC current	30mA	0.000～33.000mA	0.001mA	0.05%+4	20mA, maximum load 1kΩ 30mA, maximum load 600Ω
Simulated transmitter	-30mA	0.000～-33.000mA	0.001mA		

SIMULATE					
Loop power	24V			±10%	Maximum output current 35mA
OHM	400Ω	0.0Ω～400.0Ω	0.1Ω	0.05%+2	Excitation current is ±0.5~3mA When the excitation current is ±0.1~0.5mA, add 0.1Ω additional error Accuracy does not include lead resistance
	4kΩ	0~4.000kΩ	1Ω		Excitation current is ±0.05~0.3mA Accuracy does not include lead resistance
Thermocouple TC	R	0°C～1767°C	1°C	0.05%+3°C（≤100°C） 0.05%+2°C（＞100°C）	With the thermometric scale of ITS-90; The precision doesn't include errors in cold-end compensation
	S	0°C～1767°C			
	B	600°C～1820°C			
	K	-200.0°C～1372.0°C	0.1°C	0.05%+2°C（≤-100°C） 0.05%+1°C（＞-100°C）	
	E	-200.0°C～1000.0°C			
	J	-200.0°C～1200.0°C			
	T	-250.0°C～400.0°C			
	N	-200.0°C～1300.0°C			

<table>
<tr><td rowspan="3">Thermal resistance RTD</td><td>Cu50</td><td>-50.0～150.0°C</td><td rowspan="3">0.1°C</td><td rowspan="3">0.05%+0.6°C</td><td>Excitation current is ±0.5~3mA</td><td rowspan="2">Accuracy does not include lead resistance</td></tr>
<tr><td>PT100</td><td>-200.0～850.0°C</td><td>Excitation current is ±0.05~0.3mA</td></tr>
<tr><td>Pt1000</td><td>-200.0°C～630.0°C</td></tr>
<tr><td rowspan="4">Frequency</td><td>100Hz</td><td>1.0Hz～110.0Hz</td><td>0.1Hz</td><td rowspan="4">0.05%+2</td><td colspan="2" rowspan="4">Rectangular wave, duty cycle of 50%
1～11Vp-p</td></tr>
<tr><td>1kHz</td><td>0.100kHz～1.100kHz</td><td>1Hz</td></tr>
<tr><td>5kHz</td><td>1.00kHz～6.00kHz</td><td>10Hz</td></tr>
<tr><td>10kHz</td><td>6.0kHz～11.0kHz</td><td>100Hz</td></tr>
<tr><td colspan="7">1.Load characteristics: capacitive loads ≥0.01μF.</td></tr>
</table>

Input characteristics

Function position	Input impedance (nominal value)					
V	10MΩ，<100pF					
mV	>2.5GΩ					
mA	1Ω					
	Common-mode rejection ratio			Series-mode rejection ratio		
DCV、DCmV	80dB (dc to 50Hz / 60Hz/1kΩ)			40dB (50Hz / 60Hz)		
ACV、ACmV	60dB (dc to 50Hz / 60Hz/1kΩ)					
	Open-circuit voltage			Full-scale voltage		
Ohm	2.5V			2.2V		
Diode	< 3.5V			2.2V		
On-off	< 1V			500mV		
	Typical short-circuit current					
Ohm	500Ω	5kΩ	50kΩ	500kΩ	5MΩ	50MΩ
	0.8mA	0.2mA	20μA	2μA	0.2μA	< 0.1μA
Diode	0.2mA (typical value)					

Notice of the Instruction Manual

- The present operation instruction is subject to change without notice.
- The content of the operation instruction is regarded as correct. Whenever any user finds its mistakes, omission, etc., he or she is requested to contact the manufacturer.
- The present manufacturer is not liable for any accident and hazard arising from the customer misuse or inadvertent operation.
- The functions described in this operation instruction should not be used as grounds to apply this product to a particular purpose.



elma instruments

Elma Instruments A/S
Ryttermarken 2
DK-3520 Farum
T: +45 7022 1000
info@elma.dk
www.elma.dk

Elma Instruments AS
Garver Ytteborgsvei 83
N-0977 Oslo
T: +47 22 10 42 70
firma@elma-instruments.no
www.elma-instruments.no

Elma Instruments AB
Pepparvägen 27
S-123 56 Farsta
T: +46 (0)8-447 57 70
info@elma.se
www.elma.se

2025-09-15/SMK