Transmission & Distribution

Klippon® Connect measuring transducer terminal blocks of TTB Range



Weidmüller

Data sheet

Weidmüller Interface GmbH & Co. KG
Klingenbergstraße 26
D-32758 Detmold
Germany
Fon: +49 5231 1429-0
Fax: +49 5231 14292083
www.weidmüller.com

TTB-Range
LSTCT3 PHASENPE ATTB WITH RAIL

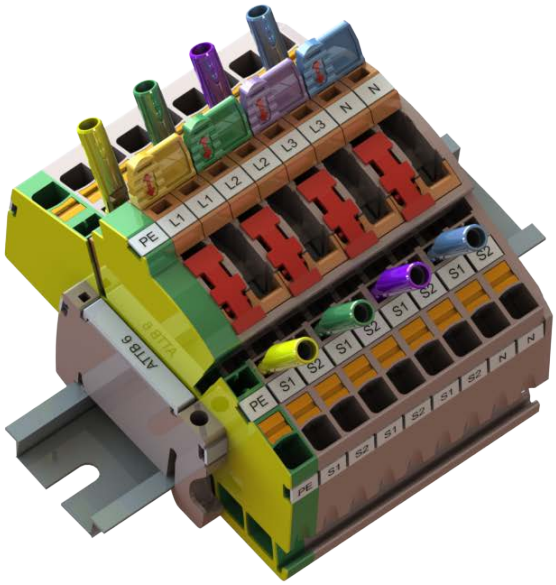

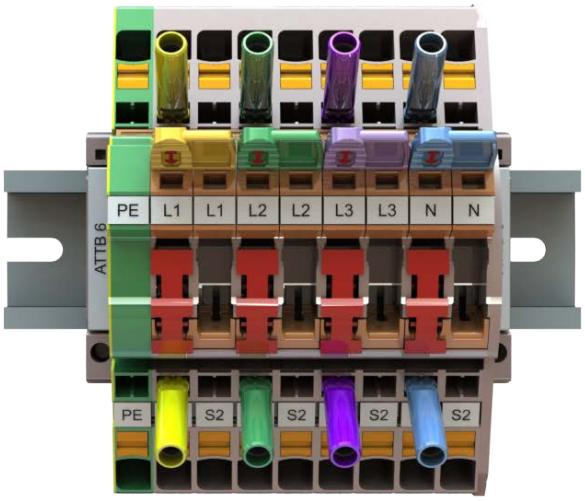

3-phase current and voltage transformer circuit including PE with PUSH IN connection technology

With this pre-assembled setup, 3-phase current transformer circuits can be clearly wired. Pre-labeled markers indicate the applied potential within the application. The terminal strip can be labeled individually on the integrated markers on the end brackets. Inserted short-circuit bridges and the use of the lever connector lead to the desired short-circuit. The required measuring equipment can be connected via the integrated test sockets. The inserted cross-connection forms the desired neutral point. For looping through the phases L1, L2, L3, N and PE, additional measuring transformer disconnect terminals or a contour-matched PE-terminal block are available. These serve as an additional measuring point for voltage measurement within the application. All function- and safety-relevant components are captively connected to the terminal block. This increases the reliability of the current and voltage transformer circuits during installation and maintenance work.

Item list

Qty.	Designation	Type	Order no.
2 x	Screwless end bracket with integrated marking surfaces	AEB 35 SCL/1 V0	2661280000
1 x	Contour-like PE terminal block	ATTB 6 PE	2710080000
41 x	Pre-labeled markers	DEK 5/7.5 MC NE WS	1720620000
1 x	8-pole cross-connection for the electrical connection	ZQV 6N/10	2733970000
8 x	Measuring transducer terminal block with PUSH IN connection technology	ATTB 6	2710070000
2 x	Angled and fingersafe test sockets, for test plugs Ø 4 mm (color: yellow)	TS TTB 6 YL	2710500000
1 x	Lever link for mechanical connection of two levers (color: yellow)	LL TTB 6/2 CM YL	2710400000
4 x	Lockout device (terminal), PA 66/6, red	SL TTB 6	2710220000
2 x	Angled and fingersafe test sockets, for test plugs Ø 4 mm (color: green)	TS TTB 6 GN	2710490000
1 x	Lever link for mechanical connection of two levers (color: green)	LL TTB 6/2 CM GN	2710390000
2 x	Angled and fingersafe test sockets, for test plugs Ø 4 mm (color: violet)	TS TTB 6 VT	2710530000
1 x	Lever link for mechanical connection of two levers (color: violet)	LL TTB 6/2 CM VT	2710430000
2 x	Angled and fingersafe test sockets, for test plugs Ø 4 mm (color: blue)	TS TTB 6 BL	2710480000
4 x	2-fold short-circuit bridge for the electrical connection of „S1“ and „S2“ (in combination with lever link and desired short-circuit position of the levers)	SCCB TTB 6/2	2710190000
1 x	Lever link for mechanical connection of two levers (color: blue)	LL TTB 6/2 CM BL	2710380000
1 x	End plate for finger safety at the end of the terminal strip	EP TTB 6	2710170000

Data sheet

LSTCT3 PHASENPE ATTB WITH RAIL — 6 mm²

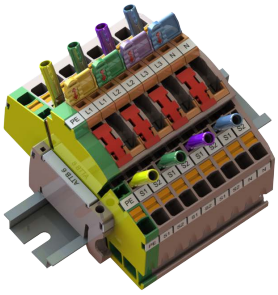

Width/Height/Depth	mm	105 x 100 x 79
Rated current / max. cond. cross-section	A/mm²	**30 / 10**
Max. clamping range	mm²	**0,5...10**

Technical Data

IEC 60947-7-1

Bemessungsdaten		IEC	UL	CSA	EN 60079-7
Rated voltage	V	500			
Rated current	A	30			
for wire cross-section	mm²	6			
Short-term current strength					
Rated impulse withstand voltage / Pollution severity			6 kV / 3		
Gauge to IEC 60947-1 / UL 94 flammability rating			A4 / V-0		
Approvals					
Clamped conductors (H05V/H07V)		**Rated connection**			
Solid / Stranded	mm²	0,5...10 / 0,5...6			
Flexible / Flexible with ferrule	mm²	0,5...10 / 0,5...6			
Twin wire-end ferrule					
Stripping length / Blade size	mm/-	12 / 0,8 x 4,0 mm			
Note					

Ordering Data

Version		Type	Qty.	Order no.
	beige	LSTCT3 PHASENPE ATTB WITH RAIL	1	**8000150790**
Note				

Klippon® Connect TTB Range*

Accessories for TTB 6 test-disconnect terminal Block

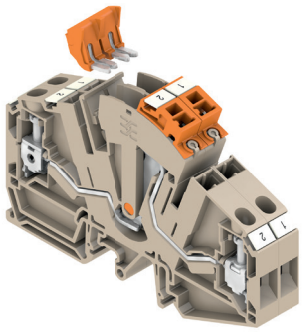

Short circuit bridge

The short circuit bridge can be simply and quickly inserted into the terminal blocks. If several levers are connected simultaneously with the lever connector, the make before break can be realised. Once mounted, the short circuit bridge cannot be removed from the application.

Type	Qty	Order no.
SCCB TTB 6/2	25	2710190000
SCCB TTB 6/3	25	2710200000
SCCB TTB 6/4	25	2710210000

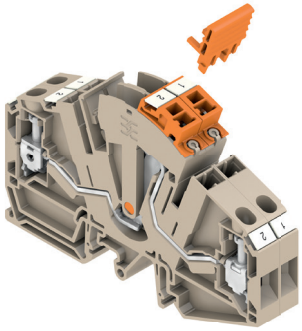

Lever link

The lever link mechanically locks the connected disconnect levers of the terminal blocks. Switching the lever link together with the inserted short circuit bridge allows make before break functionality inside the application. Once mounted, the lever link cannot be removed from the application.

Type	Qty	Order no.
LL TTB 6/1	50	2710230000
LL TTB 6/2	50	2710300000
LL TTB 6/3	50	2710440000
LL TTB 6/4	25	2710450000
LL TTB 6/6	10	2710460000

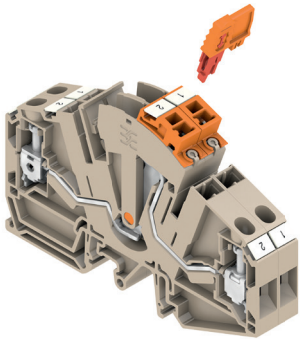

Comparative measurement lever link

The LL TTB 6 CM enables safe and fast comparative measurement. After lifting the LL TTB 6 CM, the two levers of the terminal blocks are mechanically separated from each other and can be switched independently. Once mounted, the lever link cannot be removed from the application.

Type	Qty	Order no.
LL TTB 6/2 CM	50	2710370000
LL TTB 6/3 CM	50	2726100000
LL TTB 6/4 CM	50	2726110000

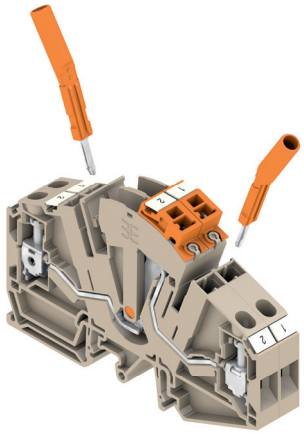

Test socket

The test socket is used to connect test devices with a standard 4.0 plug with widths up to 10 mm into the terminal. Test sockets are arranged at an angle, therefore all standard measurements (even adjoining) can be realised within the terminal width of 8.1 mm. Once mounted, the test socket cannot be removed from the application.

Type	Qty	Order no.
TS TTB 6 OR	48	2710470000
TS TTB 6 BL	48	2710480000
TS TTB 6 BK	48	2710520000
TS TTB 6 BR	48	2715540000
TS TTB 6 GN	48	2710490000
TS TTB 6 RD	48	2710510000
TS TTB 6 YL	48	2710500000
TS TTB 6 VT	48	2710530000

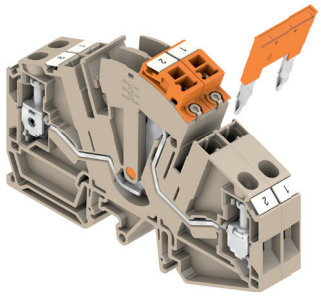

Cross-connection

The cross-connection enables potential multiplication or the realisation of a star connection within the application.

Type	Qty	Order no.
ZQV 6N/4	60	1985780000
ZQV 6N/6	60	2733950000
ZQV 6N/7	60	2733960000
ZQV 6N/10	60	2733970000

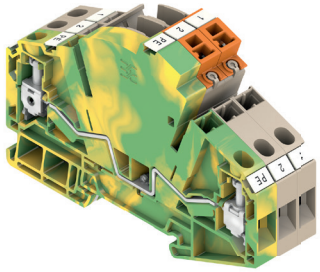

Contour-like PE terminal block

A PE terminal block with identical contour (only for TH 35 rails) is a very useful component in a test-disconnect terminal block system, since it allows easy and safe realisation of star connection / reference points within the application.

Type	Qty	Order no.
WTTB 6 PE	50	2710100000
ATTB 6 PE	50	2710080000
HTTB 6 PE	50	2710120000

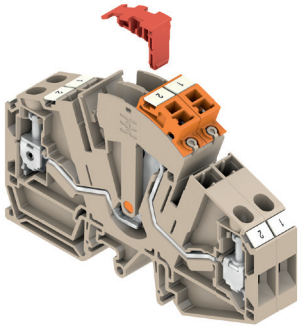

Switch lock

The switch lock can be easily inserted into the terminal from above. The switch lock prevents unauthorised opening or closing of circuits as it blocks the disconnect lever in its respective position.

Type	Qty	Order no.
SL TTB 6	50	2710220000

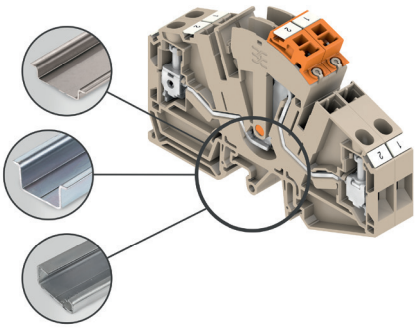

Combi-foot (for WTTB 6 and HTTB 6)

Integrated combi-foot allows easy and quick mounting onto all available TH 35 and G32 rails, thus allowing cost and time effective panel retrofit

Type	Qty	Order no.
TS 35X15/LL 2M/ST/ZN	2	0236500000
TS 32X15 2M/ST/ZN	2	0122800000
TS 35X7.5/LL 2M/ST/ZN	2	0514500000

Application examples*

Changing a Protection/Metering device

Planning and installation: Equipping the terminal blocks with accessories

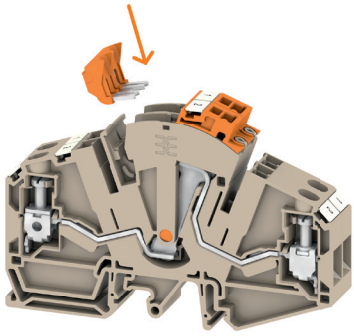

1. SCCB TTB 6 short circuit bridge installation in progress
The short circuit bridge is inserted quickly and easily on the transformer side of the terminal block in it´s deidcated channel. Once mounted, the short circuit bridge cannot be removed from the application.

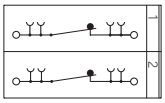

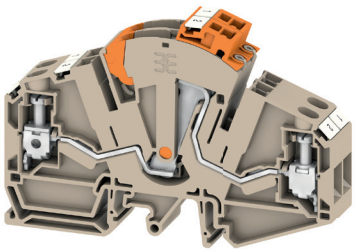

2. SCCB TTB 6 short circuit bridge installation completed
When inserted, depending on the position of the disconnect lever, an electrical connection (short circuit) between the two terminal blocks can be realised.

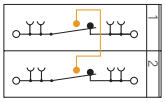

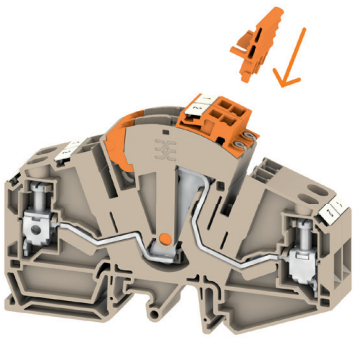

3. LL TTB 6 lever link installation in progress
The lever link is plugged into the housings of the disconnect lever of the respective terminal blocks from above and creates a mechanical connection between them. Once mounted, the lever link cannot be removed from the application.

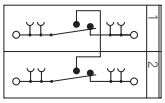

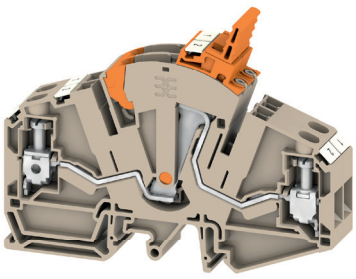

4. LL TTB 6 lever link installation completed
The mechanical connection between the lever mechanisms allows simultaneous opening or closing of two or more disconnect levers.

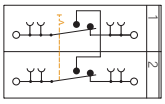

Installation: Wiring transformer and ammeter wiring

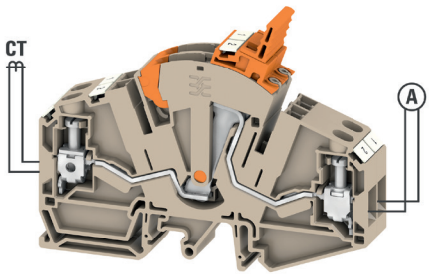

Wiring of current transformer and ammeter
The transformer will be connected in the clamping units usptream the disconnect lever and the ammeter will be connected in the clamping units downstream the disconnect lever.

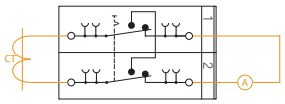

Operation: Changing an ammeter

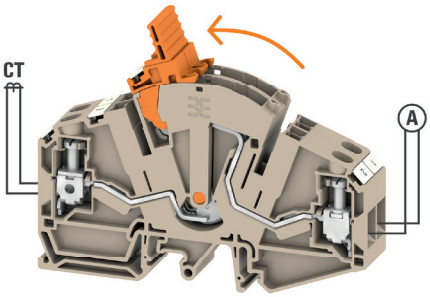

1. Switching the lever link
Switching the lever link causes an automatic short circuit (make before break mechanism) on the secondary wiring of the current transformer. This prevents the voltage on the current transformer from surging and protects it from damage leading to its destruction.

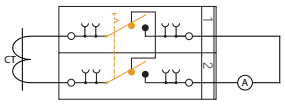

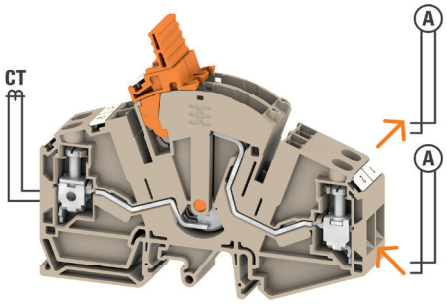

2. Replacing the ammeter
After short-circuiting the current transformer side and simultaneously disconnecting the circuit through the lever switching, the ammeter can be replaced easily and safely.

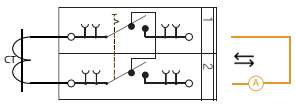

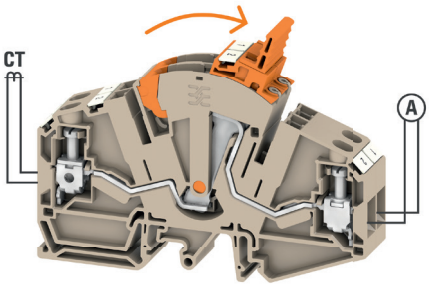

3. Restoring the lever link back into original position
Switching backwards the lever, restores the entire arrangement into its original status. The transition from the automatic short circuit back to the initial position is realised smoothly and safely.

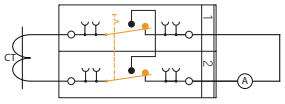

Application examples*

Performing a comparative measurement

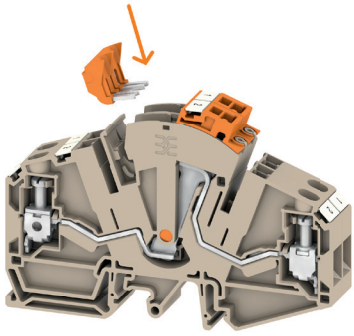

Planning and installation: Equipping the terminal blocks with accessories

1. SCCB TTB 6 short circuit bridge installation in progress
The short circuit bridge is inserted quickly and easily on the transformer side of the terminal block in it´s deidcated channel. Once mounted, the short circuit bridge cannot be removed from the application.

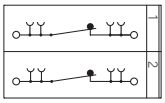

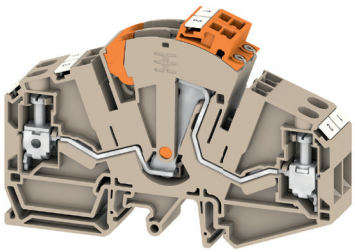

2. SCCB TTB 6 short circuit bridge installation completed
When inserted, depending on the position of the disconnect lever, an electrical connection (short circuit) between the two terminal blocks can be realised.

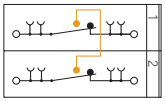

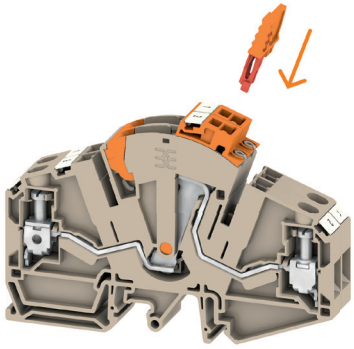

3. LL TTB 6 CM lever link installation in progress
The CM lever link (having long, asymmetrical, red coloured foot) is plugged into the housings of the disconnect lever of the respective terminal blocks from above and creates a mechanical connection between them. Once mounted, the lever link cannot be removed from the application.

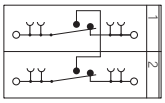

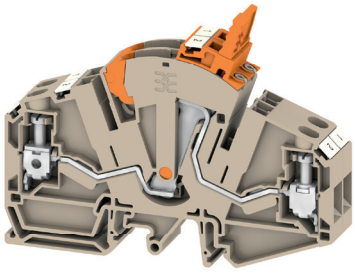

4. LL TTB 6 CM lever link installation completed
The mechanical connection of the lever mechanisms allows simultaneous opening or closing of two or more disconnect levers. By lifting the LL TTB 6 CM, the two (or more) disconnect levers of the terminal blocks are disengaged from each other and can be switched independently. Prior to any re-energising of the circuit, the CM needs to be pushed down into original position and the circuit closed.

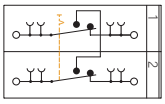

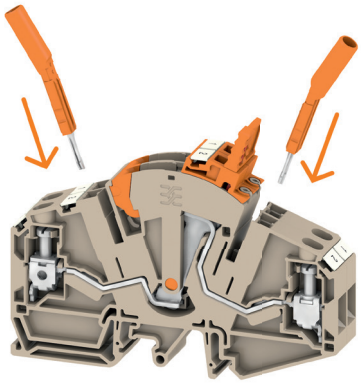

5. TS TTB 6 test sockets installation in progress
The TS TTB 6 test sockets are inserted into the bespoke housings provided in the terminal blocks from above. Once inserted, the test sockets cannot be removed from the installation.

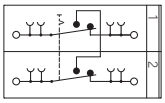

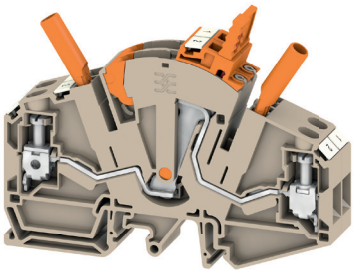

6. TS TTB 6 test sockets installation completed
The test sockets are used to connect test devices with a standard 4.0 plug with widths up to 10 mm into the terminal. Test sockets are arranged at an angle, therefore all standard measurements (even adjoining) can be realised within the terminal width of 8.1 mm. Once mounted, the test socket cannot be removed from the application.

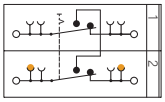

Installation: Wiring the transformer and the ammeter

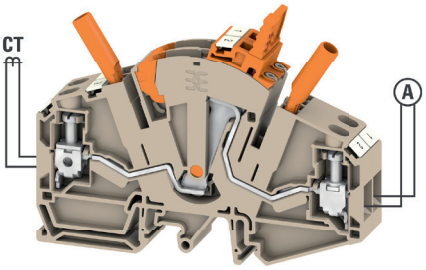

The transformer will be connected in the clamping unit usptream the disconnect lever and the ammeter will be connected in the clamping units downstream the disconnect lever.

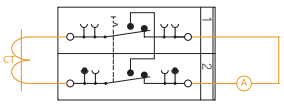

Application examples**

Performing a comparative measurement

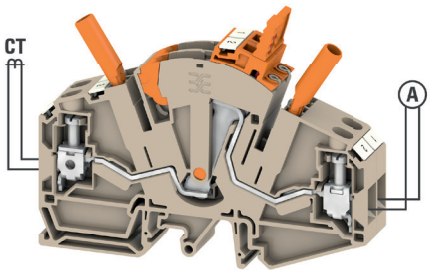

Operation: Performing a comparative measurement

1. Configuration correctly equipped
The installation of the required accessories to equip the terminal arrangement for comparative measurement and also the wiring of the primary side as well as the secondary side, has already been carried out. The installation is correctly prepared to perform the required operations.

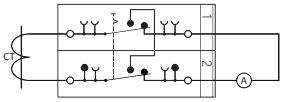

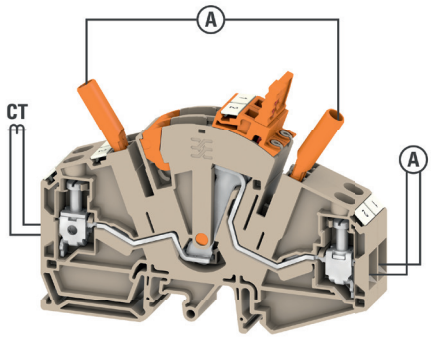

2. Connection of a reference measuring (calibrated) instrument
The reference measuring (calibrated) instrument is connected via standard 4.0 plugs to the test sockets on a terminal block. The connection is made inserting in parralel the calibrated instrument to the terminal block, where the disconnection will take place.

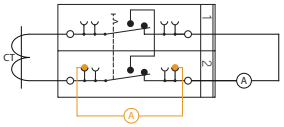

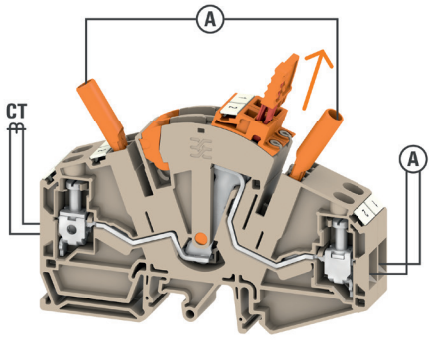

3. Lifting up the LL TTB 6 CM lever link
Lifting up the lever link LL TTB 6 CM causes a mechanical decoupling of the two disconnect levers. Now the two disconnect levers can be operated independently from each other within this application.

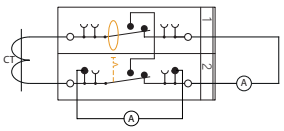

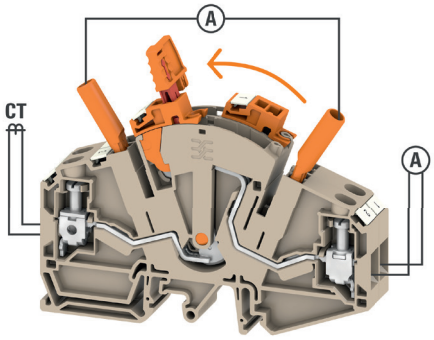

4. Switching the LL TTB 6 CM lever link
By switching the previously decoupled lever link, the current flow is diverted from the terminal block through the now parallel-connected reference measuring instrument.

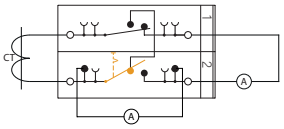

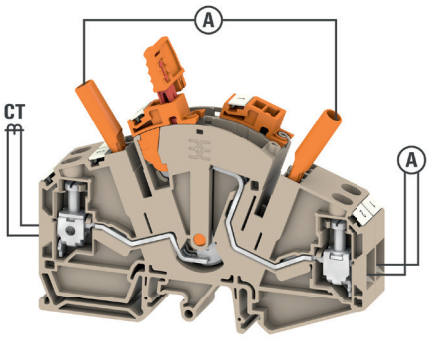

5. Performing the comparative reading of the two ammeters
The values measured by the ammeter connected downstream can now be compared with the values given by the reference meter since both instruments are reading the same current. The comparison measurement has now been successfully completed and the correct functional verification of the ammeter connected downstream the terminal has been carried out.

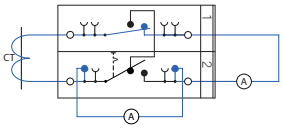

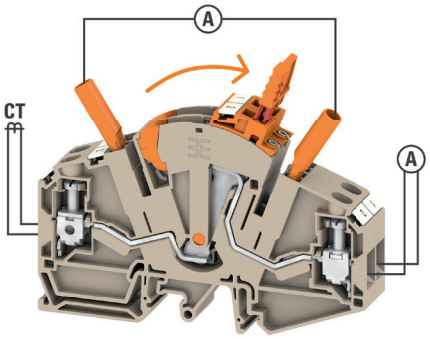

6. Restoring the lever link back into original position
Switching backwards the lever, restores the entire arrangement into its original status. The transition from the comparative measurement status back to the initial position is realised smoothly and safely.

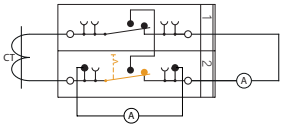

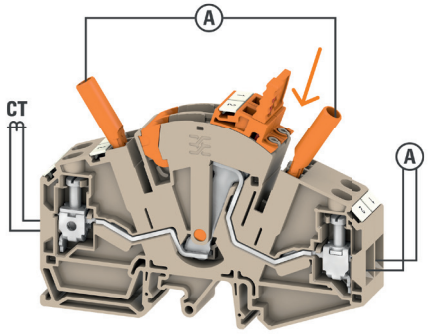

7. Pressing down the LL TTB 6 CM lever link
Pressing down the LL TTB 6 CM lever link restores the mechanical connection of the two disconnect levers within the application.

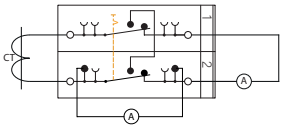

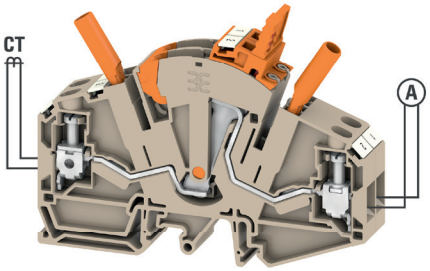

8. Disconnecting of the reference measuring instrument
The reference measurement instrument is therefore disconnected from the installation by simply removing its plugs from the test sockets of the terminal block and the installation is restored in the initial status.

