

Dok.-Nr. 2.204.037.1.a 05/2022

Current Transformer

CT27-35, CT27-64

Data sheet

Janitza electronics GmbH
Vor dem Polstück 6
35633 Lahnau | Germany
Support +49 6441 9642-22
info@janitza.com | www.janitza.com

Janitza®

TECHNICAL DATA & DIMENSIONS

The very compact *CT27* current transformer is especially designed for connection to digital measurement systems. The main advantage of the *CT27* is that the dimensions of this product are designed for use in a three phase circuit breaker with a fase distance of 17.5mm. The *CT27* is supplied with a connector with clamp technology for easy installation of the secondary leads. Optional: screw mounting or mounting on a DIN-rail.

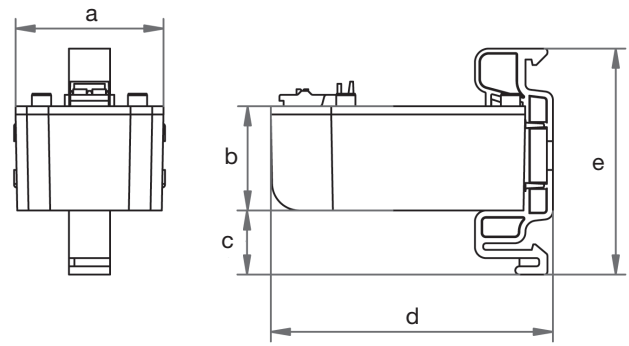



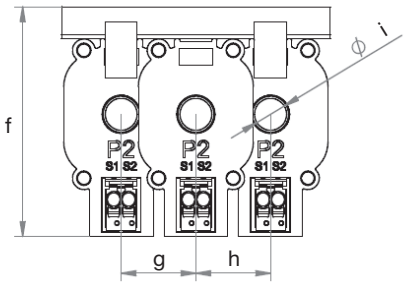



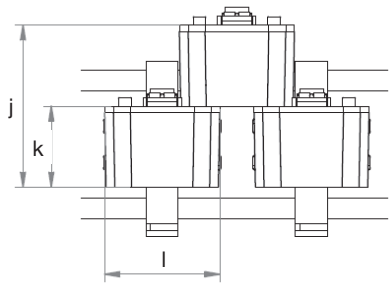

Dimensions	
a	27.0 mm (1.063 in)
b	19.0 mm (0.748 in)
c	11.7 mm (0.461 in)
d	51.4 mm (2.024 in)
e	41.2 mm (1.622 in)
f	54.0 mm (2.126 in)
g	17.5 mm (0.689 in)
h	17.5 mm (0.689 in)
i	7.5 mm (0.295 in)
j	38.0 mm (1.496 in)
k	19.0 mm (0.748 in)
l	27.0 mm (1.063 in)

Type	Primary current in A	Secondary current in A	Power in VA (on the terminals)	Dimensions in mm (H x W x D)	Weight in kg	Item no.
CT27-35	35	1	0.2	approx. 46 x 27 x 23	0.05	15.04.080
CT27-64	64	1	0.2	approx. 46 x 27 x 23	0.04	15.04.081

Specifications	Data
Protection degree	IP20
Location	Indoor use
Only suitable for insulated conductors	
Accuracy class	1
Altitude	Up to 2000 m (1.24 mile)
Relative humidity	5% .. 85%, non condensing
Ambient temperature	-10 °C to 55 °C (14 °F to 131 °F)
Storage temperature	-20 °C to 70 °C (-4 °F to 158 °F)
Pollution degree	2
Application conditions Standard	IEC 61869-2:2012, EN-IEC 61010-1:2010, RoHS Directive
Class of insulation	A (105 °C / 221 °F)
Secondary terminal	female connector (clamping) for solid, stranded or ferrule (0.2 - 1.5 mm^2)
Primary window suitable for cable	7.5 mm (0.295 in)
Rated short-time thermal current (Ith)	60 x In/1s
Rated dynamic current (Idyn)	2.5 x Ith
Rated continuous thermal current (Icth)	100 %
Rated insulation level	0.72/3/-kV
Rated frequency	50/60 Hz

CONNECTION

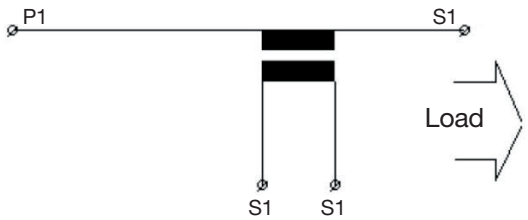

Janitza®

Janitza electronics GmbH
Vor dem Polstück 6 | 35633 Lahnau
Germany

Tel. +49 6441 9642-0
info@janitza.com | www.janitza.com

Doc. no. 2.204.037.1.a | 05/2022 | Subject to technical alterations.
The latest version of the document can be found in the download area at www.janitza.com.