Differential current transformer Type B+



Overview of devices									
Attribute	DC supply voltage	Max. primary residual current in mA	Internal consumption	Dimensions in mm					Item no.
				A	B	C	D	E	
CT-AC/DC type B+ 35 RCM	24 V (21.6 to 26.4 V)	0.3 A	max. 1.5 W	35	106	104	113	69	**15.03.469**
CT-AC/DC type B+ 70 RCM	24 V (21.6 to 26.4 V)	0.3 A	max. 1.5 W	70	141	104	143	69	**15.03.468**
Accessories									
1-phase switched mode power supply devices in the installation housing Prim. 115 – 230 V 50/60 Hz, sec. 24 V DC; 1 A Dimensions in mm (H x W x D): 90.5 x 52 x 62.5; Weight: Approx. 169 g									**16.05.002**

Dimension diagrams All dimensions in mm

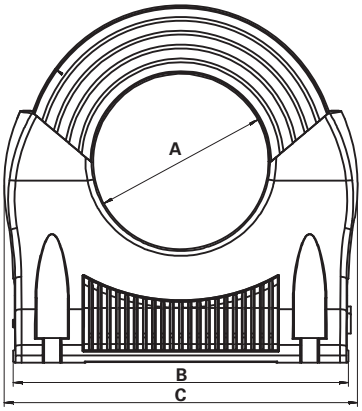

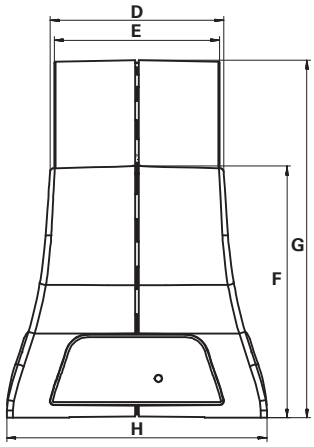

Dimensions differential current transformer type B+								
Type	Dimensions in mm							
	A	B	C	D	E	F	G	H
CT-AC/DC Typ B+ 35 RCM	35	99	106	69	66	87	113	104
CT-AC/DC Typ B+ 70 RCM	70	134	141	69	66	100	143	104