Rogowski current transformer and measurement transducer

The operation of the Rogowski coils as per the technical data mentioned herein can only be assured in combination with Janitza measuring transducer "RogoTrans".

Rogowski coil, item no.	15.03.609	15.03.610	15.03.611
Diameter	70 mm	175 mm	300 mm
Length of the connection line	3 m	3 m	3 m
Max. output voltage	30 V	30 V	30 V
Primary current*1	Up to 10000 A*1	Up to 10000 A*1	Up to 10000 A*1
Rated transformation ratio (@ 50 Hz)	44.44 kA/V	44.44 kA/V	44.44 kA/V
Rated frequency	50/60 Hz	50/60 Hz	50/60 Hz
Secondary voltage	22.5 mV (at 1000 A / 50 Hz)	22.5 mV (at 1000 A / 50 Hz)	22.5 mV (at 1000 A / 50 Hz)
Mutual inductance	71.98 nH	72.314 nH	72.84 nH
Temperature coefficient of M	±30 ppm/K	±30 ppm/K	±30 ppm/K
Frequency bandwidth (cable length 1.5 m)*2	420 kHz*2	350 kHz*2	300 kHz*2
Phase displacement (@ 50/60 Hz)*3	0.004°*3	0.004°*3	0.004°*3
Coil inductance	180 µH	343 µH	566 µH
Coil resistance	56 Ω	105 Ω	170 Ω
Ratio error (centred)	– 0.5 to 0.5 % class 0.5 Accuracy per IEC 61869-2	– 0.5 to 0.5 % class 0.5 Accuracy per IEC 61869-2	– 0.5 to 0.5 % class 0.5 Accuracy per IEC 61869-2
Ratio error (all positions)*4	– 0.75 to 0.75*4 incl. positioning errors	– 0.75 to 0.75*4 incl. positioning errors	– 0.75 to 0.75*4 incl. positioning errors
Linearity error	None	None	None
Influence of external current*5	±0.2*5	±0.2*5	±0.2*5
Weight	192 g	206 g	222 g

*1 In combination with Janitza measurement transducer RogoTrans up to 4000 A.
*2 On request, the frequency bandwidth and phase shifting model can be made available.
*3 With installation at a right angle to the phase conductor.
*4 Under consideration that the Janitza Rogowski current transformer is installed perpendicular to a primary conductor of min. Ø 15 mm.
*5 Under consideration that a further phase conductor of min. Ø 15 mm is installed at the same height and at a right angle to the Janitza Rogowski current transformer.

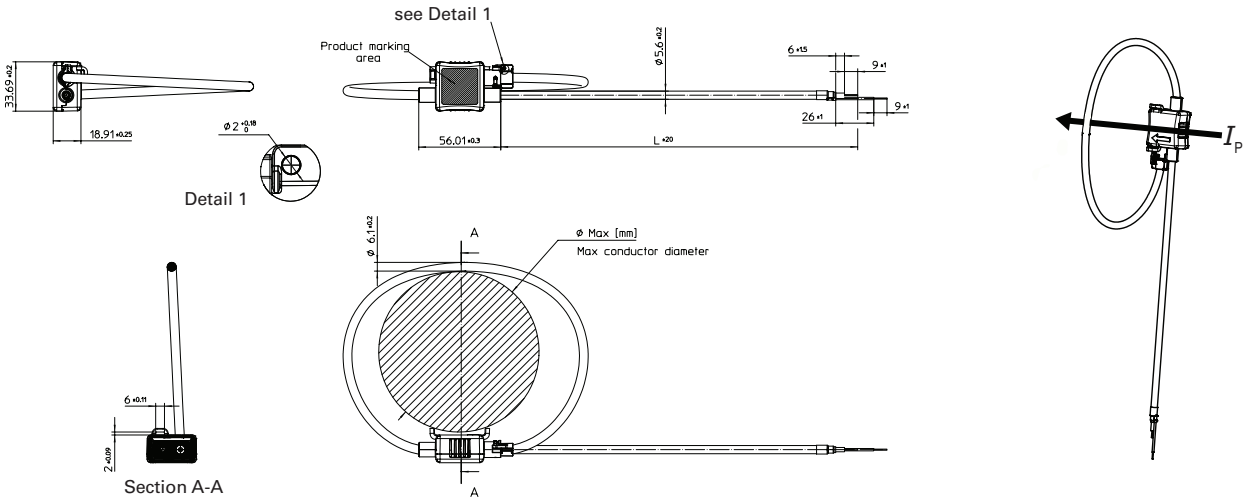

Connection

