Janitza®

Rogowski current transformer for measurement transducer Janitza® RogoTrans

Operation manual (item no. 15.03.609, 15.03.610, 15.03.611)



Before installing the product, please read this installation manual through carefully!

Janitza electronics GmbH • Vor dem Polstück 6 • D-35633 Lahnau
Telephone support: +49 6441 9642-22 • Fax: +49 6441 9642-30
E-mail: info@janitza.de • Internet: http://www.janitza.de

Safety information

The "installation manual" is not a complete directory of all safety measures required to operate the device.
Special operating conditions may require further measures. The "operation manual" contains instructions that must be observed to ensure your personal safety and to prevent damage to property.

Symbols used:

⚠	This symbol is an addition to the safety instructions and indicates an electrical hazard.
⚠	This symbol is an addition to the safety instructions and indicates a potential hazard.
☞	This symbol with the word **NOTE!** describes: • Procedures that do not pose any risks of injures. • Important information, procedures or handling steps.

Measures

- Only qualified electrical specialists are permitted to install, put into operation, maintain and operate the device.
- During all work on the device comply with the national health, safety and accident prevention regulations.
- If you do not observe the safety regulations, this can result in death, serious physical injuries or extensive property damage.
- During set-up and operation, observe the applicable provisions and safety regulations (also national safety regulations), as well as standard engineering practice.
- Observe the installation instructions provided!
- De-energise the system before starting the work! Check that it is de-energised!
- De-energise the device before starting the work! Check that it is de-energised!
- The safety-related data can be found in this document.
- Do not exceed the threshold values specified in the operation manual and on the rating plate.
- Install the device in an appropriate enclosure with suitable protection type in accordance with IEC 60529 to protect against mechanical or electrical damage.
- Do not exceed the threshold values specified in the operation manual and on the rating plate.
- Never operate equipment and current transformer circuits whilst open.
- It is prohibited to open or modify the device. Do not repair the device yourself, but rather replace it with an equivalent device.
- Repairs must be carried out by the manufacturer only. The manufacturer shall not be liable for damage due to violations.
- The prerequisites for faultless, safe operation of the device are proper transport and proper storage, set-up and installation, as well as operation and maintenance.
- Only use accessories that comply with the specifications of the device manufacturer (e.g. combination of Janitza® current transformer and Janitza® RogoTrans measurement transducer).
- Store the product documentation.

☞ **Do not use outdoors!**

Brief description

- Record currents of up to 4000 A (in combination with Janitza® measurement transducer
- IP57
- Accuracy suitable for class 0.5 for power monitoring and energy measurement (with centred installation)

The Janitza® Rogowski current transformer is used for current measurement of AC currents and is primarily employed for retrospective installation in existing systems - optionally on power rails or power cables.
Retrospective installation around the conductor is possible, because the measuring line of the current transformer can be separated. The output signal from the Janitza® Rogowski current transformer is fed to a measurement transducer, which issues AC current of max. 1 A at the output.
For the measurement transducer connection, see figure 5.

For further information, please refer to the operation manual of the Janitza® RogoTrans measurement transducer.

Installation

- To open the Janitza® Rogowski current transformer, turn the bayonet catch to the left (unlock measuring line).
- Draw the coil cable out of the enclosure. (Fig. 1)
- Guide the coil cable around the power rail. (Fig. 2)
- Slide the coil cable into the enclosure. (Fig. 3)
- Turn the bayonet catch to the right until the end of the measuring coil audibly latches.
- Make sure that the measuring coil does not touch the power rail that is to be measured or a neighbouring rail, because the maximum permissible temperature of the signal line is +80 °C.
- Connect the signal line of the Janitza® Rogowski current transformer to the input terminals of the measurement transducer.
- Secure the Janitza® Rogowski current transformer to the primary conductor. To do so, guide a cable tie through the intended fixture on the enclosure of the current transformer.
- If necessary, seal the bayonet catch of the Janitza® Rogowski current transformer so that it is tamper-proof.

☞ The Janitza® Rogowski current transformer and its supply cables must not exhibit any insulation damage.

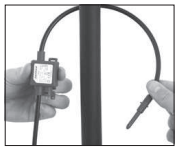

Figure 1

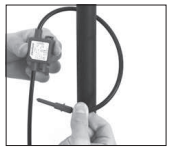

Figure 2



Figure 3



Figure 4

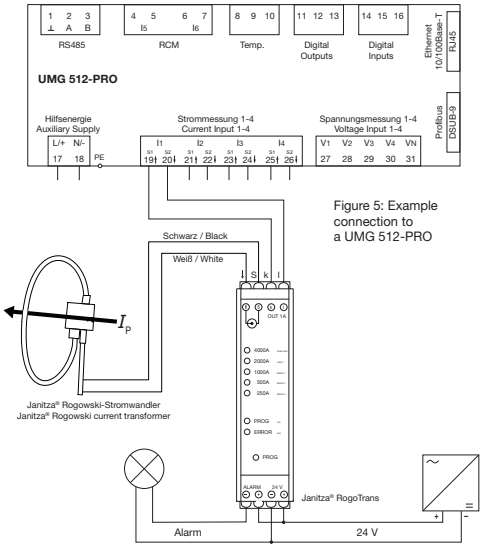

Figure 5: Example connection to a UMG 512-PRO

Symbols on the device

⚠ Attention!
Read the operation manual through carefully before use!

⚠ Attention! Electrical voltage!

Attention! Avoid fitting or removing uninsulated phase conductors that conduct dangerous voltages, because these can cause electric shocks, electrical burns or flashover.

Protection class II, protective insulation

RoHS This product satisfies the provisions of RoHS directive 2011/65/EU, RoHS

CE conformity, this product satisfies the provisions of the low voltage directive 2014/35/EU

Technical data

Item no.	15.03.609	15.03.610	15.03.611
Diameter	70 mm	175 mm	300 mm
Line length of the connection line	3 m	3 m	3 m
Rated insulation voltage	1000 V CAT III PD2	1000 V CAT III PD2	1000 V CAT III PD2
Maximum output voltage	30 V	30 V	30 V
Primary current up to	10000 A*1	10000 A*1	10000 A*1
Transformation ratio (@ 50 Hz)	44.44 kA/V	44.44 kA/V	44.44 kA/V
Rated frequency	50/60 Hz	50/60 Hz	50/60 Hz
Secondary voltage	22.5 mV (at 1000 A / 50 Hz)*1	22.5 mV (at 1000 A / 50 Hz)*1	22.5 mV (at 1000 A / 50 Hz)*1
Mutual inductance	71.98 nH	72.314 nH	72.84 nH
Temperature coefficient	±30 ppm/K	±30 ppm/K	±30 ppm/K
Frequency bandwidth (cable length 1.5 m)	420 kHz*2	350 kHz*2	300 kHz*2
Phase shifting (@ 50/60 Hz)*3	0.004°	0.004°	0.004°
Coil inductance	180 µH	343 µH	566 µH
Coil resistance	56 Ω	105 Ω	170 Ω
Transformation errors (centred)	- 0.5 to 0.5 % class 0.5 Accuracy per IEC 61869-2	- 0.5 to 0.5 % Accuracy per IEC 61869-2	- 0.5 to 0.5 % class 0.5, Accuracy per IEC 61869-2
Transformation errors (all positions)*4	- 0.75 to 0.75 incl. positioning errors	- 0.75 to 0.75 incl. positioning errors	- 0.75 to 0.75 incl. positioning errors
Linearity error	None	None	None
Influence by external currents*5	±0.4 %	± 0.4 %	± 0.4 %
Protection degree	IP57	IP57	IP57
Ambient temperature	-40 °C ... +80 °C	-40 °C ... +80 °C	-40 °C ... +80 °C
Weight	192 g	206 g	222 g

*1 In combination with Janitza® measurement transducer RogoTrans up to 4000 A
*2 On request, the frequency bandwidth and phase shifting model can be made available.
*3 With installation at a right angle to the phase conductor.
*4 Under consideration that the Janitza® Rogowski current transformer is installed perpendicular to a primary conductor of min. Ø 15 mm
*5 Under consideration that a further phase conductor of min. Ø 15 mm is installed at the same height and at a right angle to the Janitza® Rogowski current transformer.

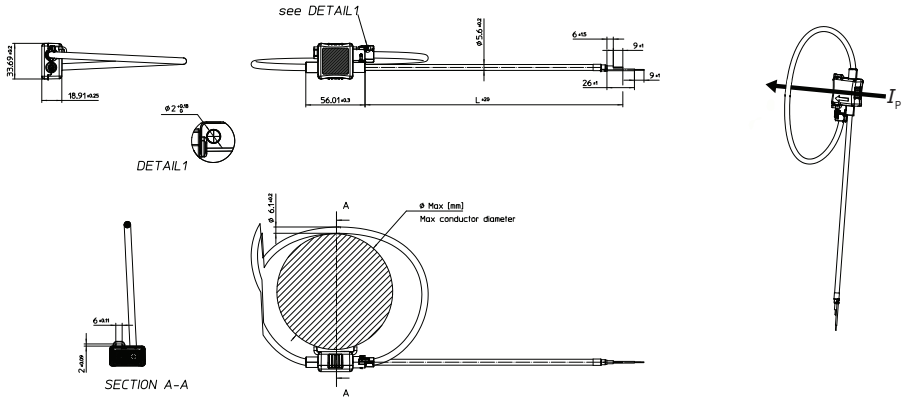

Connection

