UMG 605-PRO

Power quality analysers for DIN rails

Harmonics

Flicker

Email



Alarm management

Reporting

Memory 128 MByte

Communication
- Profibus (DP / V0)
- Modbus (RTU, UDP, TCP, Gateway)
- TCP/IP
- BACnet (optional)
- HTTP (configurable homepage)
- FTP (file transfer)
- TFTP
- NTP (time synchronisation)
- SMTP (email function)
- DHCP
- SNMP

Interfaces
- Ethernet
- RS232
- RS485 (Modbus)
- RS485 (DSUB9) for Profibus

Accuracy of measurement
- Energy: Class 0.5S (... / 5 A)
- Current: 0.2 %
- Voltage: 0.2 %

Peak demand management (optional)
- Up to 64 switch-off stages

Power quality
- Harmonics up to the 63rd harmonic, direct / indirect
- Flicker measurement
- Short-term interruptions (> 10 ms)
- Transient recorder (> 50 µs)
- Starting currents (> 20 ms)
- Unbalance
- Half wave RMS recordings (up to 4.5 min.)

Networks
- IT, TN, TT networks
- 3 and 4-phase networks
- Up to 4 single-phase networks

Measured data memory
- 128 MByte Flash

Programming language
- Jasic®

2 digital inputs
- Pulse input
- Logic input
- State monitoring
- HT / LT switching

2 digital outputs
- Pulse output kWh / kvarh
- Switch output
- Threshold value output
- Logic output*

*(expandable via external I/O modules)

Temperature measurement
- PT100, PT1000, KTY83, KTY84

Network visualisation software
- Free GridVis®-Basic



Areas of application

- Power quality monitoring
- Ethernet gateway for subordinate measurement points
- Analysis of electrical disturbances in the event of network problems
- Report generator for various power quality standards
- Control tasks e.g. depending on measured value or limit values being reached
- Measured value transducer for building management systems or PLC

Main features

Power quality

- Continuous power quality monitoring (e.g. EN 50160)
- Harmonics analysis up to the 63rd harmonic, even and odd
- Interharmonics
- Distortion factor THD-U / THD-I
- Measurement of positive, negative and zero sequence component
- Flicker measurement in accordance with DIN EN 61000-4-15
- Logging and storage of transients (> 50 µs)
- Recording of short-term interruptions (> 10 ms)
- Monitoring start-up processes
- Recorder for limit value events

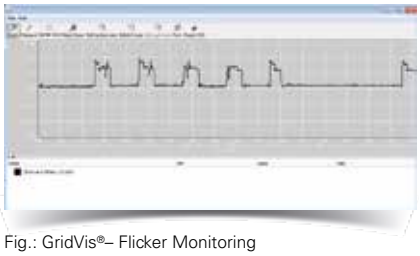

Fig.: GridVis®– Flicker Monitoring

Power

- 4 voltage and 4 current measurement inputs
- Logging and digitalisation of effective values (true RMS) of currents and voltages (15 – 440 Hz)
- Continuous sampling of the voltage and current measurement inputs at 20 kHz
- Recording of over 2,000 measured values per measurement cycle (200 ms)
- Stipulation of nominal current possible for measuring current events
- Fourth current measurement input is suitable for measuring the current in the neutral or PE conductor or for measuring any potential difference between N and PE.
- Large measured data memory (memory range = 5 000 000 measured values)
- Simple remote polling of measured data via the device's own homepage
- All interfaces can be used simultaneously
- Up to 4 ports can be accessed simultaneously



Fig.: Alarm management, alarm list (logbook)

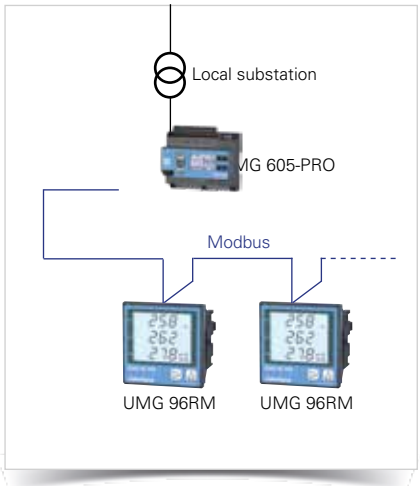

Fig.: Example of a master - slave combination

Impressive reporting with GridVis®

- Automatic generation and sending of power quality reports
- Power quality reports per EN 50160, EN 61000-2-4, IEEE519
- Illustration of the ITI-(CBEMA) curve
- Freely definable time planning for the generation of reports



Fig.: Automatic reporting

Modern communications architecture via Ethernet

- Rapid, cost-optimised and reliable communication through integration into an existing Ethernet architecture
- Integration in PLC systems and building management systems
- High flexibility due to the use of open standards
- Simultaneous polling of interfaces possible

Ethernet-Modbus gateway

- Simple integration of Modbus-RTU devices into an Ethernet architecture through the Modbus gateway function
- Integration of devices with identical file formats and matching function codes possible via Modbus RTU interface

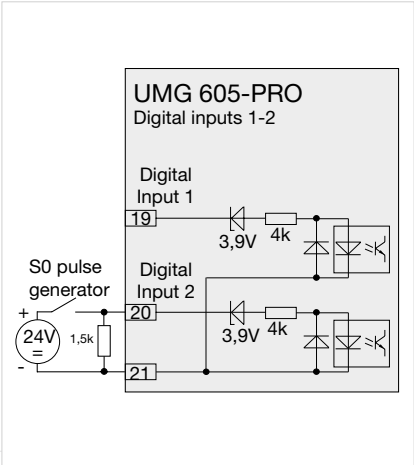

Fig.: Example for the connection of an S0 pulse transducer to digital input 2

Powerful alarm management

- Can be programmed via the graphic programming or Jasic® source code
- All measured values can be used
- Can be arbitrarily, mathematically processed
- Individual forwarding via email sending, switching of digital outputs, writing to Modbus addresses etc.
- Watchdog APP
- Further alarm management functions via GridVis®-Service alarm management

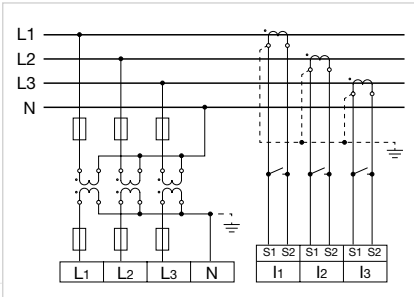

Fig.: Measurement via 3 voltage transformers in a three-phase 4-wire network with asymmetric loading

High-speed Modbus

- Fast and reliable data exchange via RS485 interface
- Speed up to 921.6 kB/s

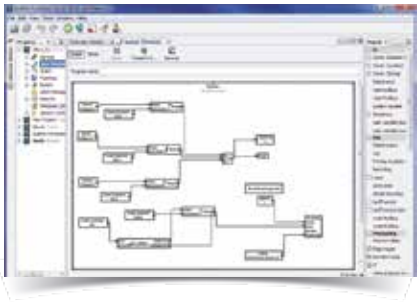

Fig.: Graphical programming

Graphical programming

- Comprehensive programming options on the device, 7 programs simultaneously (PLC functionality)
- Jasic® source code programming
- Functional expansions far beyond pure measurement
- Complete APPs from the Janitza library



Fig.: Illustration of the online data via the device's own homepage

Convenient home page and email functions

- Information can be received conveniently by email and via the device homepage
- Access to powerful device homepage via web browser
- Online data, historical data, graphs, events and much more, is available direct from the homepage

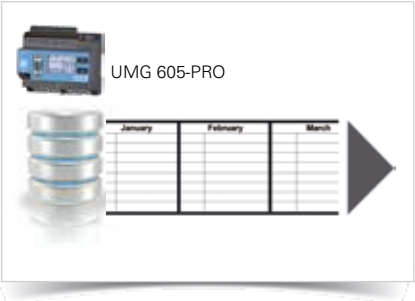

Fig.: Large measurement data memory

Large measurement data memory

- 128 MByte
- 5,000,000 saved values
- Recording range up to 2 years
- Recording freely configurable by the user

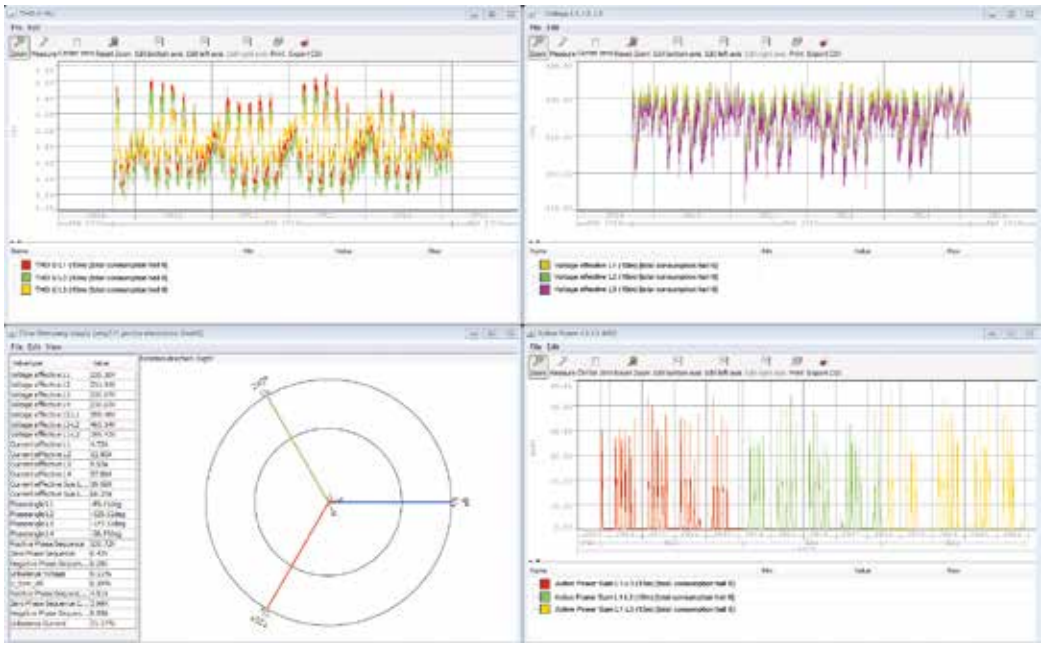

Fig.: GridVis® Graphset with THD-U, voltage, phasor diagram and load profile (kW)

Dimension diagrams

All dimensions in mm

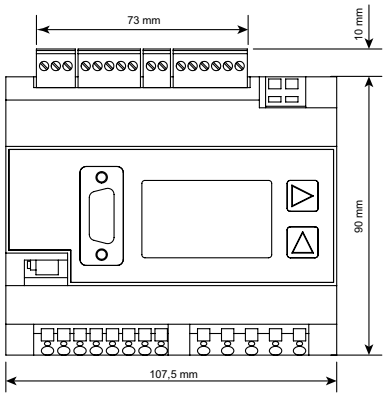

Front view

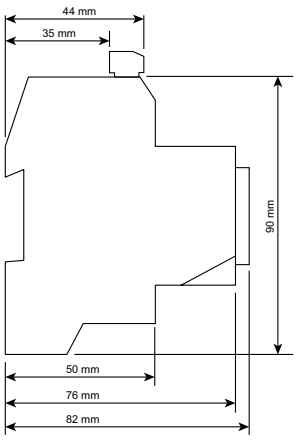

Side view

Typical connection

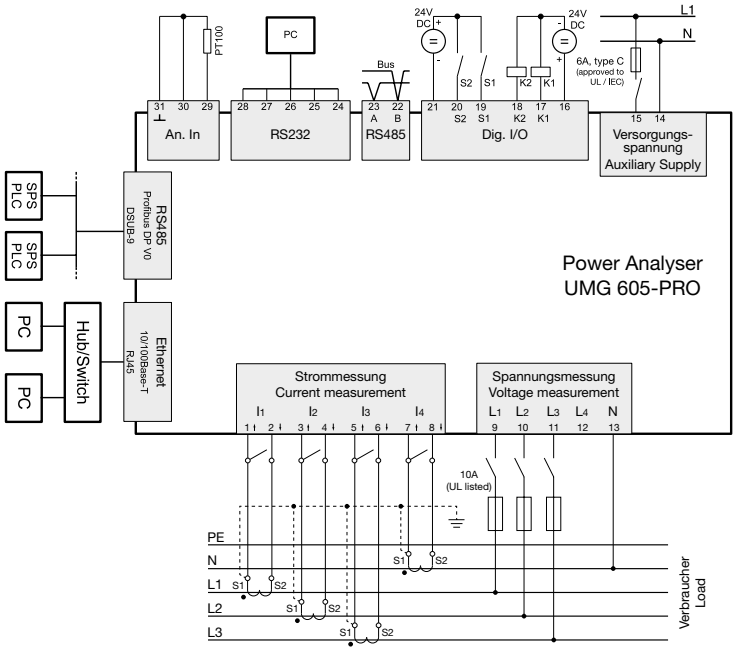

Device overview and technical data

	UMG 605-PRO		
Item number		**52.16.028**	
Item number (UL)	**52.16.227**	**-**	**52.16.229**
AC supply voltage	95 to 240 V AC	50 to 110 V AC	20 to 50 V AC
Supply voltage DC	135 to 340 V DC	50 to 155 V DC	20 to 70 V DC
Device options			
Emax function (peak load optimisation)	**52.16.084**	**52.16.084**	**52.16.084**
BACnet communication	**52.16.083**	**52.16.083**	**52.16.083**

General	
Net weight	350 g
Device dimensions	approx. l = 107.5 mm, w = 90 mm, h = 82 mm (per DIN 43871:1992)
Housing flammability rating	UL 94V-0
Installation position	any
Fastening/assembly	35 mm DIN rail (as per IEC/EN60999-1, DIN EN 50022)
Battery	Type Lithium CR2032, 3 V

Environmental conditions The device is intended for weatherproof, fixed installation and meets the operational conditions in accordance with DIN IEC 60721-3-3.	
Working temperature range	–10° C to +55° C
Relative humidity	5 to 95%, (at +25° C) without condensation
Pollution degree	2
Operating altitude	0 to 2000 m above sea level
Installation position	any
Ventilation	forced ventilation is not required.

Transport and storage The following information applies to equipment transported in its original packaging or	
Free fall	1 m
Temperature	–20° C to +70° C

Supply voltage The supply voltage must be connected through a UL/IEC approved fuse (6A Char. B) to the	
230 V option: • Nominal range • Operating range • Power consumption • Overvoltage category	 95 V to 240 V (50/60 Hz) / DC 135 V to 340 V ±10% of nominal range max. 3.2 W / 9 VA 300 V CAT II
90 V option (without UL approval): • Nominal range • Operating range • Power consumption • Overvoltage category	 50 V to 110 V (50/60 Hz) / DC 50 V to 155 V ±10% of nominal range max. 3.2 W / 9 VA 300 V CAT II
24V option: • Nominal range • Operating range • Power consumption • Overvoltage category	 20 V to 50 V (50/60 Hz) / DC 20 V to 70 V ±10% of nominal range max. 5 W / 8 VA 150 V CAT II

Terminal connection capacity (supply voltage) Connectable conductors. Only one conductor can be connected per terminal!	
Single core, multi-core, fine-stranded	0.08 - 2.5 mm², AWG 28 - 12
Terminal pins, core end sheath	1.5 mm², AWG 16

Protection class Protection class II in accordance with IEC 60536 (VDE 0106, part 1), i.e. a ground wire connection is not required!	
Protection against ingress of solid foreign bodies and water	IP20 in accordance with EN60529 September 2014, IEC60529:2013

Digital inputs	
(Pulse input S0)	
Maximum counter frequency	20 Hz
Switching input	
Input signal present	18 V to 28 V DC (typical 4 mA)
Input signal not present	0 to 5 V DC, current less than 0.5 mA
Response time (Jasic program)	200 ms
Cable length	up to 30 m unshielded, from 30 m shielded

Digital outputs 2 digital outputs; semiconductor relays, not short-circuit proof	
Switching voltage	max. 60 V DC, 30 V AC
Switching current	max. 50 mAeff AC/DC
Response time (Jasic program)	200 ms
Output of voltage dips	20 ms
Output of voltage exceedance events	20 ms
Switching frequency	max. 20 Hz
Cable length	up to 30 m unshielded; from 30 m shielded

Connectable conductors	
Single core, multi-core, fine-stranded	0.08 - 1.5 mm^2
Terminal pins, core end sheath	1 mm^2, Only one conductor must be connected per terminal!

Temperature measurement input	
Update time	Approx. 200 ms
Connectable sensors	PT100, PT1000, KTY83, KTY84
Total burden (sensor + cable)	max. 4 kOhm
Cable length	up to 30 m unshielded, from 30 m shielded

Sensor type	**Temperature range**	**Resistor range**	**Measurement uncertainty**
KTY83	-55° C to +175° C	500 Ohm to 2.6 kOhm	± 1.5% rng[1)]
KTY84	-40° C to +300° C	350 Ohm to 2.6 kOhm	± 1.5% rng[1)]
PT100	-99° C to +500° C	60 Ohm to 180 Ohm	± 1.5% rng[1)]
PT1000	-99° C to +500° C	600 Ohm to 1.8 kOhm	± 1.5% rng[1)]

[1)] rng = metering range

Connectable conductors	
Single core, multi-core, fine-stranded	0.08 - 1.5mm^2
Terminal pins, core end sheath	1 mm^2 Only one conductor must be connected per terminal!

RS232 interface	
Connection	5-pin screw-type terminals
Protocol	Modbus RTU/slave
Transmission rate	9.6 kbps, 19.2 kbps, 38.4 kbps, 57.6 kbps, 115.2 kbps

RS485 interface	
Connection	2-pin screw-type terminals
Protocol	Modbus RTU/slave, Modbus RTU/master
Transmission rate	9.6 kbps, 19.2 kbps, 38.4 kbps, 57.6 kbps, 115.2 kbps, 921.6 kbps

Profibus interface	
Connection	SUB D 9-pole
Protocol	Profibus DP/V0 per EN 50170
Transmission rate	9.6 kBaud to 12 MBaud

Ethernet interface	
Connection	RJ45
Function	Modbus gateway, embedded web server (HTTP)
Protocols	TCP/IP, EMAIL (SMTP), DHCP client (BootP), Modbus/TCP(port 502), ICMP (ping), NTP, TFTP, Modbus RTU over Ethernet (port 8000), FTP SNMP.

Voltage measurement inputs	
Three-phase 4-conductor systems (L-N/L-L)	max. 277 V / 480 V
Three-phase 3-conductor systems (L-L)	max. 480 V
Resolution	0.01 V
Crest factor	2 (related to 480 V_{rms})
Overvoltage category	300 V CAT III
Measurement voltage surge	4 kV
Protection of voltage measurement	1 - 10 A
Impedance	4 MOhm / phase
Power consumption	approx. 0.1 VA
Sampling rate	20 kHz / phase
Transients	> 50 µs
Frequency of the fundamental oscillation	15 Hz to 440 Hz
- Resolution	0.001 Hz

Current measurement inputs	
Rated current	5 A
Rated current	6 A
Protection when measuring directly (without a current transformer)	6 A, char. B (approved i.a.w. UL/IEC)
Resolution on the display	10 mA
Crest factor	2 (related to 6 A_{rms})
Overvoltage category	300 V CAT III
Measurement voltage surge	4 kV
Power consumption	approx. 0.2 VA (Ri = 5 MOhm)
Overload for 1 sec.	100 A (sinusoidal)
Sampling rate	20 kHz

Phase angle accuracy of measurement	0.15°

Terminal connection capacity (current measurement and voltage measurement) Connectable conductors. Only one conductor can be connected per terminal!	
Single core, multi-core, fine-stranded	0.08 - 4 mm², AWG 28 - 12
Terminal pins, core end sheath	2.5 mm², AWG 14

Firmware	
Firmware update	Update via GridVis®software. Firmware download (free of charge) from the website: http://www.janitza.com

Comment: For detailed technical information please refer to the operation manual and the Modbus address list.