UMG 509-PRO

Multifunction power analyser with RCM

Power quality

Ethernet connection

Graphic programming



Residual current monitoring

Ethernet-Modbus gateway

Alarm management

Communication
- Profibus (DP/V0)
- Modbus (RTU, TCP, Gateway)
- TCP/IP
- BACnet (optional)
- HTTP (Homepage)
- FTP (File transfer)
- SNMP
- TFTP
- NTP (time synchronisation)
- SMTP (email function)
- DHCP

Interfaces
- Ethernet
- Profibus (DSUB-9)
- RS485 Modbus (terminal strip)

Accuracy of measurement
- Energy: Class 0.2S (... / 5 A)
- Current: 0.2 %
- Voltage: 0.1 %

Power quality
- Harmonics up to 63th harmonic
- Short-term interruptions (> 20 ms)
- Transient recorder (> 50 µs)
- Starting currents (> 20 ms)
- Unbalance

Networks
- IT, TN, TT networks
- 3 and 4-phase networks
- Up to 4 single-phase networks

Measured data memory
- 256 MByte Flash
- 32 MB SDRAM

PLC functionality
- Graphical programming
- Jasic® programming language
- Programming of threshold values etc.

2 digital inputs
- Pulse input
- Logic input
- State monitoring
- HT / LT switching

2 digital outputs
- Pulse output kWh / kvarh
- Switch output
- Threshold value output
- Logic output

Network visualisation software
- Free GridVis®-Basic

Thermistor input
- PT100, PT1000, KTY83, KTY84

RCM – Residual Current Monitoring
- 2 residual current inputs

Janitza®



Areas of application

- Continuous monitoring of the power quality
- Energy management systems (ISO 50001)
- Master device with Ethernet gateway for subordinate measurement points
- Visualisation of the energy supply in the LVDB
- Analysis of electrical disturbances in the event of power quality problems
- Cost centre analysis
- Remote monitoring in the property operation
- Use in test fields (e.g. in universities)

Main features

High quality measurement with high sampling rate (20 kHz per channel)

Power quality

- Harmonics analysis up to 63rd harmonic
- Acquisition of short-term interruptions
- Acquisition of transients
- Display of waveforms (current and voltage)
- Unbalance
- Vector diagram

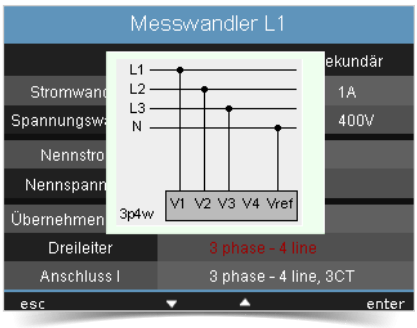

Fig.: Example for the configuration of current measurement via 3 current transformers in a three-phase 4-wire network on the UMG 509-PRO display

RCM (Residual Current Monitoring)

- Continuous monitoring of residual currents (Residual Current Monitor, RCM)
- Alarming in case a preset threshold fault current reached
- Near-realtime reactions for triggering countermeasures
- Permanent RCM measurement for systems in permanent operation without the opportunity to switch off
- Ideal for the central earthing point in TN-S systems

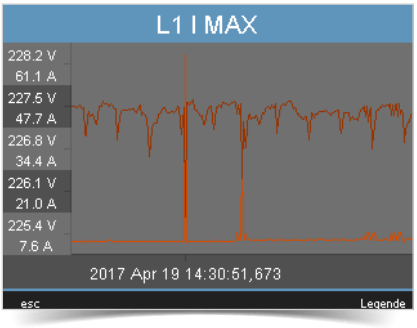

Fig.: Illustration of the full wave effective values for an event (voltage drop)

Modern communications architecture via Ethernet

- Ethernet interface and web server
- Faster, better cost-optimised and more reliable communication system
- High flexibility due to the use of open standards
- Integration in PLC systems and BMS through additional interfaces
- BACnet optionally available
- Up to 4 ports simultaneous
- Versatile IP protocols

Modbus Gateway function

- Economical connection of devices without Ethernet interface
- Integration of devices with Modbus-RTU interface possible
- Data can be scaled and described
- Minimised number of IP addresses required

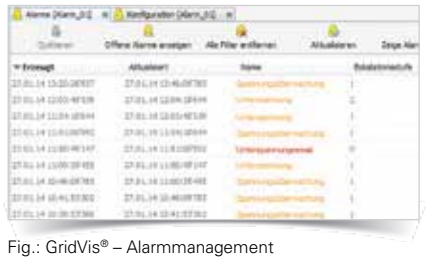

Fig.: GridVis® – Alarmmanagement

Graphical programming

- Comprehensive programming options (PLC functionality)
- Jasic® source code programming
- Sustainable functional expansions far beyond pure measurement
- Complete APPs from the Janitza library

Powerful alarm management

- Can be programmed via the graphic programming or Jasic® source code
- All measured values can be used
- Can be arbitrarily, mathematically processed
- Individual forwarding via email sending, switching of digital outputs, writing to Modbus addresses etc.
- Watchdog APPs
- Further alarm management functions via GridVis®-Service alarm management

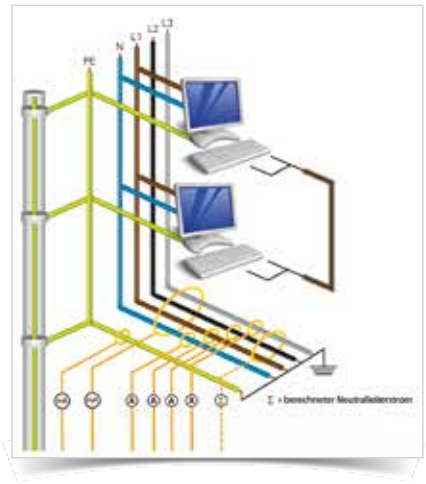

Fig.: Example RCM measurement



Ethernet connection

Dimension diagrams

All dimensions in mm

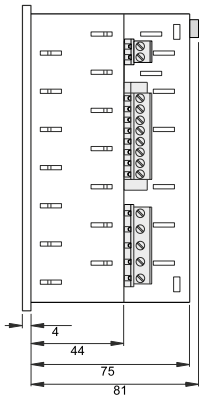

Side view

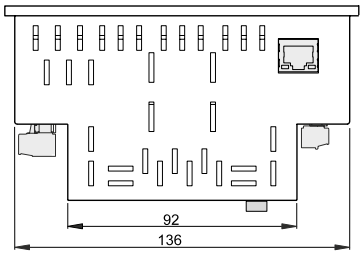

View from below

Cut out: 138$^{+0.8}$ x 138$^{+0.8}$ mm

Typical connection

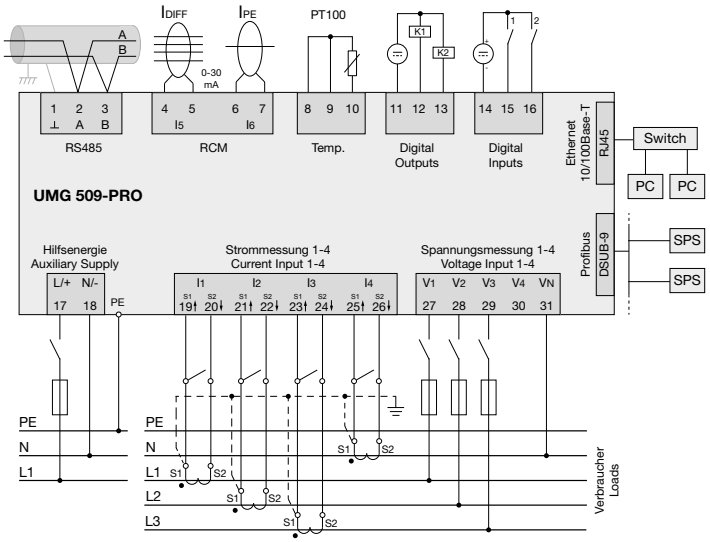

Device overview and technical data

	UMG 509-PRO	
Item number	**52.26.001**	**52.26.003**
AC supply voltage	95 to 240 V AC	48 to 110 V AC
Supply voltage DC	80 to 300 V DC	24 to 150 V DC
Device options		
BACnet communication	**52.26.081**	**52.26.081**

General	
Net weight (with attached connectors)	approx. 1080 g
Device dimensions	approx. l = 144 mm, w = 144 mm, h = 75 mm
Battery	type Li-Mn CR2450, 3V (approval i.a.w. UL 1642)
Clock (in temperature range -40°C to 85°C)	+-5 ppm (corresponding to approx. 3 minutes per year)

Transport and storage The following information applies to devices which are transported or stored in the original packaging.	
Free fall	1 m
Temperature	-25° C to +70° C

Ambient conditions during operation	
The device is intended for weather-protected, stationary use. The device must be connected to the ground wire connection! Protection class I in acc. with IEC 60536 (VDE 0106, Part 1).	
Working temperature range	–10° C to +55° C
Relative humidity	5 to 95% (at 25° C) without condensation
Operating altitude	0 to 2000 m above sea level
Pollution degree	2
Installation position	upright
Ventilation	forced ventilation is not required.
Protection against ingress of solid foreign bodies and water • Front • Rear side	 IP40 in acc. with EN60529 IP20 in acc. with EN60529

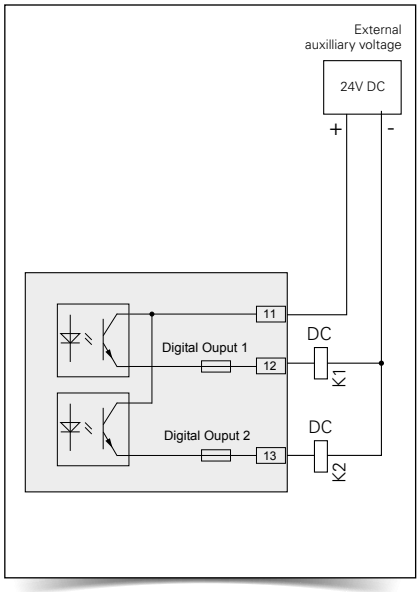

Fig. Example for two electronical relays connected to the digital outputs

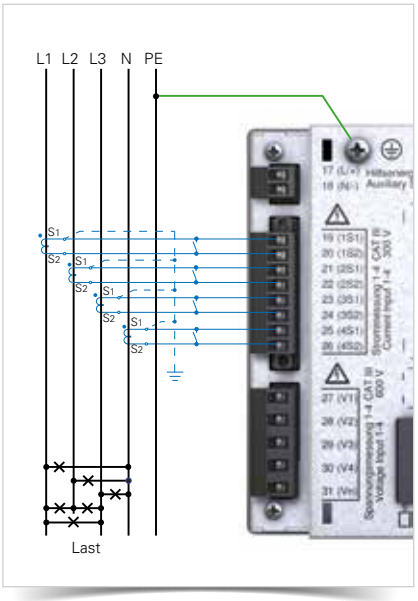

Fig.: Example current measurement

Supply voltage	
Installations of overvoltage category	300 V CAT III
Protection of the supply voltage (fuse)	6 A, type B (approved as per UL/IEC)
230 V option: - Nominal range - Operating range - Power consumption	 95 V to 240 V (50/60 Hz) / DC 80 V to 300 V ± 10% of nominal range max. 7 W / 14 VA
24V option: • Nominal range • Operating range • Power consumption	 48 V to 110 V (50/60 Hz) or DC 24 to 150 V ± 10% of nominal range max. 9 W / 13 VA

Terminal connection capacity (supply voltage) Connectable conductors. Only one conductor can be connected per terminal!	
Single core, multi-core, fine-stranded	0.2 – 2.5 mm^2, AWG 24 - 12
Terminal pins, core end sheath	0.25 – 2.5 mm^2
Tightening torque	0.5 – 0.6 Nm
Stripping length	7 mm

Current measurement	
Rated current	5 A
Resolution	0.1 mA
Metering range	0.005 to 7 A_{rms}
Measurement range exceeded (overload)	from 7.5 A_{rms}
Crest factor	2.4
Overvoltage category	230 V option: 300 V CAT III 24 V option: 300 V CAT II
Measurement voltage surge	4 kV
Power consumption	approx. 0.2 VA (Ri = 5 mOhm)
Overload for 1 sec.	120 A (sinusoidal)
Sampling rate	20 kHz / phase

Voltage measurement	
The voltage measurement inputs are suitable for measurements in the following power supply systems:	
Three-phase 4-conductor systems with rated voltages up to	417 V / 720 V 347 V / 600 V UL listed
Three-phase 3-conductor systems with rated voltages up to	600 V
From a safety and reliability perspective, the voltage measurement inputs are designed as follows:	
Overvoltage category	600 V CAT III
Measurement voltage surge	6 kV
Protection of voltage measurement	1 – 10 A
Metering range L-N	0[1)] to 600 V_{rms}
Metering range L-L	0[1)] to 1000 V_{rms}
Resolution	0.01 V
Crest factor	1.6 (related to 600 V_{rms})
Impedance	4 MOhm / phase
Power consumption	approx. 0.1 VA
Sampling rate	20 kHz / phase
Transients	> 50 µs
Frequency of the fundamental oscillation - Resolution	40 Hz to 70 Hz 0.001 Hz

1) The device can only determine measured values, if an L-N voltage of greater than 10 Veff or an L-L voltage of greater than 18 Veff is applied to at least one voltage measurement input.

Phase angle accuracy of measurement	0.075°

Terminal connection capacity (voltage and current measurement) Connectable conductors. Only one conductor can be connected per terminal!	
Single core, multi-core, fine-stranded	0.2 – 2.5 mm², AWG 24-12
Terminal pins, core end sheath	0.25 – 2.5 mm²
Tightening torque	0.5 – 0.6 Nm
Stripping length	7 mm

Residual current monitoring (RCM)	
Rated current	30 mA_{rms}
Metering range	0 to 40 mA_{rms}
Triggering current	100 µA
Resolution	1 µA
Crest factor	1.414 (related to 40 mA)
Burden	4 Ohm
Overload for 1 sec.	5 A
Sustained overload	1 A
Overload for 20 ms	50 A
Residual current monitoring	as per IEC/TR 60755 (2008-01), Type A
Maximum external burden	300 Ohm (for cable break detection)

Terminal connection capacity (residual current monitoring) Connectable conductors. Only one conductor can be connected per terminal!	
Rigid/flexible	0.14 – 1.5 mm², AWG 28-16
Flexible with core end sheath without plastic sleeve	0.20 – 1.5 mm²
Flexible with core end sheath with plastic sleeve	0.20 – 1.5 mm²
Stripping length	7 mm
Tightening torque	0.20 – 0.25 Nm
Cable length	up to 30 m unshielded, from 30 m shielded

Temperature measurement input 3-wire measurement	
Update time	1 second
Connectable sensors	PT100, PT1000, KTY83, KTY84
Total burden (sensor + cable)	max. 4 kOhm
Cable length	up to 30 m unshielded, from 30 m shielded

Sensor type	Temperature range	Resistor range	Measurement uncertainty
KTY83	-55° C to +175° C	500 Ohm to 2.6 kOhm	± 1.5% rng
KTY84	-40° C to +300° C	350 Ohm to 2.6 kOhm	± 1.5% rng
PT100	-99° C to +500° C	60 Ohm to 180 Ohm	± 1.5% rng
PT1000	-99° C to +500° C	600 Ohm to 1.8 kOhm	± 1.5% rng

Terminal connection capacity (temperature measurement input) Connectable conductors. Only one conductor can be connected per terminal!	
Single core, multi-core, fine-stranded	0.08 – 1.5 mm²
Terminal pins, core end sheath	1 mm²

Digital inputs 2 Digital inputs with a joint earth	
Maximum counter frequency	20 Hz
Response time (Jasic program)	200 ms
Input signal present	18 V to 28 V DC (typical 4 mA)
Input signal not present	0 to 5 V DC, current less than 0.5 mA
Cable length	up to 30 m unshielded, from 30 m shielded

Digital outputs 2 digital outputs with a joint earth; opto coupler, not short-circuit proof	
Supply voltage	20 V - 30 V DC (SELV or PELV supply)
Switching voltage	max. 60 V DC, 30 V AC
Switching current	max. 50 mAeff AC/DC
Response time (Jasic program)	200 ms
Output of voltage dips	20 ms
Output of voltage exceedance events	20 ms
Switching frequency	max. 20 Hz
Cable length	up to 30 m unshielded, from 30 m shielded

Terminal connection capacity (digital inputs and outputs)	
Rigid/flexible	0.14 - 1.5 mm^2, AWG 28-16
Flexible with core end sheath without plastic sleeve	0.25 - 1.5 mm^2
Flexible with core end sheath with plastic sleeve	0.25 - 0.5 mm^2
Tightening torque	0.22 - 0.25 Nm
Stripping length	7 mm

RS485 interface 3-wire connection with GND, A, B	
Protocol	Modbus RTU/slave, Modbus RTU/master, Modbus RTU /gateway
Transmission rate	9.6 kbps, 19.2 kbps, 38.4 kbps, 57.6 kbps, 115.2 kbps, 921.6 kbps
Termination resistor	can be activated by micro switch

Profibus interface	
Connection	SUB D 9-pole
Protocol	Profibus DP/V0 per EN 50170
Transmission rate	9.6 kBaud to 12 MBaud

Ethernet interface	
Connection	RJ45
Function	Modbus gateway, embedded web server (HTTP)
Protocols	CP/IP, EMAIL (SMTP), DHCP client (BootP), Modbus/TCP, Modbus RTU over Ethernet, FTP, ICMP (Ping), NTP, TFTP, BACnet (optional), SNMP

Firmware	
Firmware update	Update via GridVis®software. Firmware download (free of charge) from the website: http://www.janitza.com

Comment: For detailed technical information please refer to the operation manual and the Modbus address list.