Part no. 33.03.390

Doc. no. 2.029.000.1.a 04/2024

www.janitza.com

Deutsche Version: siehe Vorderseite

Remote display

RD 96

Installation instructions

Installation and device settings

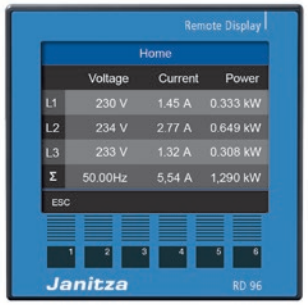

User Manual:

Janitza electronics GmbH
Vor dem Polstück 6
35633 Lahnau | Germany
Support +49 6441 9642-22
info@janitza.com | www.janitza.com

Janitza®

1

General

Disclaimer
Compliance with the usage information for the devices is a prerequisite for safe operation and attaining the stated performance characteristics and product features. Janitza electronics GmbH assumes no liability for bodily injury, material damage or financial losses which result from disregard of the usage information.

Make sure that your usage information is readily available and legible.

Additional documentation can be found on our website at www.janitza.com under Downloads.

Copyright notice
© 2020 - Janitza electronics GmbH - Lahnau.
All rights reserved. Any reproduction, processing, distribution or other use, in whole or in part, is prohibited.

Subject to technical changes.
- Make sure that your device matches the installation instructions.
- First read and understand the documents associated with the product.
- Keep the documents associated with the product available for the entire service life and pass them on to any possible subsequent users.
- Please find out about device revisions and the associated amendments of the documentation associated with your product at www.janitza.com.

Disposal
Please abide by national regulations! Dispose of individual parts, as applicable, depending on their composition and existing country-specific regulations, e.g. as:
- Electronic waste
- Plastics
- Metals

or engage a certified disposal company to handle scrapping.

Relevant laws, standards and directive used

Please see the declaration of conformity on our website (www.janitza.com) for the laws, standards and directives applied for the device by Janitza electronics GmbH.

2

Safety

Safety information
The installation instructions do not represent a compete set of all safety measures required for the operation of the device.
Special operating conditions can require additional measures. The installation instructions contain information which must be observed to ensure your personal safety and avoid material damage.

Symbols used on the device:

	The additional symbol on the device itself indicates an electrical danger that can result in serious injuries or death.
	This general warning symbol draws attention to a possible risk of injury. Be certain to observe all of the information listed under this symbol in order to avoid possible injury or even death.

Safety information in the installation instructions is marked by a warning triangle and, in dependence on the degree of hazard, is displayed as follows:

⚠DANGER

Indicates the immediate threat of danger that leads to severe or fatal injury.

⚠WARNING

Indicates a possibly hazardous situation that can lead to severe injury or death.

⚠CAUTION

Warns of an immediately hazardous situation which, if not avoided, can result in minor or moderate injury.

ATTENTION

Warns of an immediately hazardous situation which, if not avoided, can result in material or environmental damage.

ⓘ INFORMATION

Indicates procedures in which there is **no** hazard of personal injury or material damage.

Safety measures
When operating electric devices, it is unavoidable for certain parts of these devices to conduct hazardous voltage. Consequently, severe bodily injury or material damage can occur if they are not handled properly:
- Before making connections to the device, ground the device by means of the ground wire connection, if present.
- Hazardous voltages can be present in all circuitry parts that are connected to the power supply.
- There can still be hazardous voltages present in the device even after it has been disconnected from the supply voltage (capacitor storage).
- Do not operate equipment with current transformer circuits when open.
- Do not exceed the limit values specified in the user manual and on the rating plate! This must also be observed during testing and commissioning!
- Observe the safety and warning notices in the usage information associated with the device and its components!

⚠ WARNING

Hazard due to disregard of warning and safety notices!
Disregard of the warning and safety notices on the device itself and in the information on the use of the device and its components can lead to injuries or even death!
Observe the safety and warning notices on the device itself and in the usage information associated with the devices and their components, such as:
· Installation instructions.
· User manual.
· Supplement Safety Information.

Qualified personnel
To avoid bodily injury and material damage, only qualified personnel with electrical training are permitted to work on the device who have knowledge of:
- the national accident prevention regulations.
- safety technology standards,
- installation, commissioning and operation of the device.

⚠WARNING

Risk of injury due to electrical voltage!
Severe bodily injury or death can result from:
· Touching bare or stripped leads that are energized.
· Device inputs that pose a hazard when touched.
Switch off your installation before commencing work! Secure it against being switched on! Check to be sure it is de-energized! Ground and short circuit! Cover or block off adjacent live parts!

Intended use
The device is:
- Intended for installation in switchboard cabinets and small installation distributors. The mounting position is arbitrary (please note the step "Mounting").
- Not intended for installation in vehicles! Use of the device in non-stationary equipment constitutes an exceptional environmental condition and is only permissible by special agreement.
- Not intended for installation in environments with harmful oils, acids, gases, vapors, dusts, radiation, etc.
- Is designed as a device for use indoors, protected from weather influences.

Incoming goods inspection
The prerequisites for trouble-free and safe operation of this device include proper transport, storage, setup and assembly, as well as proper operation and maintenance. Exercise due caution when unpacking and packing the device, do not use force and only use suitable tools. Check:
- Visually inspect the devices for flawless mechanical condition.
- Check the scope of delivery (see user manual) for completeness before you begin installing the device.

If it can be assumed that safe operation is no longer possible, the device must be taken out of operation immediately and secured against unintentional start-up.
It can be assumed that safe operation is no longer possible if the device, for example:
- has visible damage.
- No longer functions despite an intact power supply.
- was subjected to extended periods of unfavorable conditions (e.g. storage outside of the permissible climate thresholds without adjustment to the room climate, condensation, etc.) or transport stress (e.g. falling from an elevated position, even without visible external damage, etc.).

3

Brief device description

The external RD 96 display:
- is intended for compatible Janitza DIN rail measurement devices and for front panel installation;
- requires neither additional software nor drivers and functions using plug & play via the USB interface of the measurement device;
- has 6 function buttons for operation.

A USB cable is included in the scope of delivery which is used to establish the connection between the external display and the measurement device using plug&play.

The USB connection cable remains in the switchboard cabinet or small distribution board and must be laid separately from other electrical circuits! Please note the special rules for the USB interface in step 5.

ⓘ *INFORMATION*

Further information about the RD 96 external display can be found in the user manual!

Further information on the functions, installation, operation and technical data of the measurement device **can be found in the corresponding usage information!**

4

Mounting

Install the device in the weatherproof front panel of switchboard cabinets.

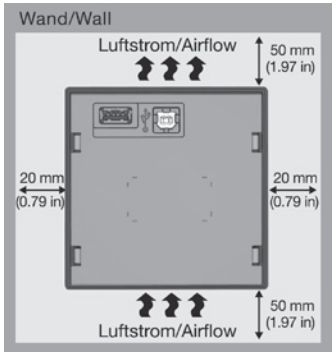

Fig. Mounting orientation, rear view, RD 96

Cutout dimensions: $92^{+0.8}$ x $92^{+0.8}$ mm
($3.62^{+0.03}$ in x $3.62^{+0.03}$ in)

To ensure ventilation of the device, take into account the distances to adjacent components!

⚠CAUTION

Material damage due to disregard of the mounting instructions.
Disregard of the installation instructions can damage or destroy your device.
· **Provide adequate air circulation in your installation environment. For high ambient temperatures, provide cooling if necessary.**

Secure the device inside the switchboard or on the front panel using the fastening clips on the side. To do so, proceed as follows:
- Before inserting the device, remove the fastening clips (e.g. with a screwdriver) by levering them horizontally.

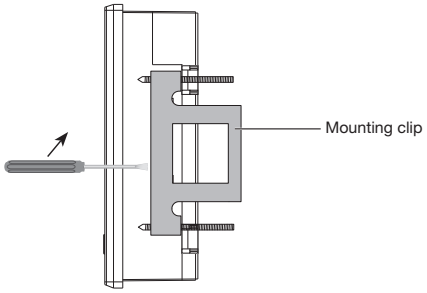

Fig. Side views of the RD 96 with fastening clips.

- Guide the device through the switchboard (mounting plate) from the front.
- Attach the clips to the side of the device by pushing them in and snapping them into place.
- Screw in the clamping screws until they touch the mounting plate.
- Then tighten the clamping screws with two further turns each. **Too tightly tightened clamping screws can destroy the fastening clips!**

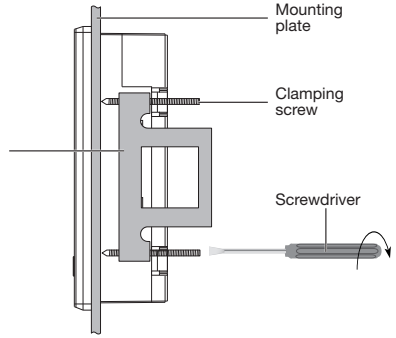

ⓘ *INFORMATION*

Once the clamping screws touch the mounting plate, turn them a max. of 2 further turns!

5 USB interfaces (Universal Serial Bus)

The RD 96 has 2 USB interfaces on the back for connection to the measurement device.

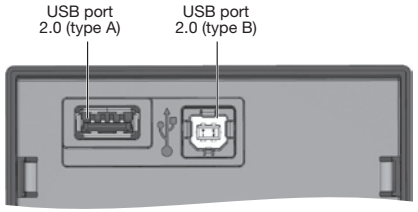

Fig. Back of RD 96

The USB serial bus system requires that the **Type A** USB interface on the measurement device be connected to the **Type B** USB interface on the **RD 96**. The corresponding USB cable (type A plug to type B plug) is included with the RD 96 in the scope of delivery.
The **Type A** USB interface on the RD 96 serves as a further serial connection to the bus system.

ATTENTION

Interference with the electrical safety and electromagnetic compatibility (EMC) of your electrical installation can arise due to laying cables and wires of different current types within an installation system.
Laying communication cables and power cables in the same cable duct system can lead to interference in the communication cables (combination of emission, radiation or induction of unwanted electrical energy) and thus worsen the transmission quality of the communication data, even to the point of data loss.

- Lay lines and cables of different current types separated spatially from each other!
- Observe minimum distances for low voltage cables and data cables!
- Use separate cable duct systems or dividers within a cable duct system!
- Observe the essential basic conditions for electromagnetic compatibility (EMC) of communication cabling according to EN 50174 - Part 2.
- Please also observe the standard DIN VDE 0100-520 - Erection of low-voltage systems - which allows shared installation without additional separation if the dielectric strength is ensured by appropriate insulation between the power cable and the communication cable!

6 Operation and button functions

After connecting the USB cable, the measurement device display screen appears on the external display (RD 96) after a time delay.

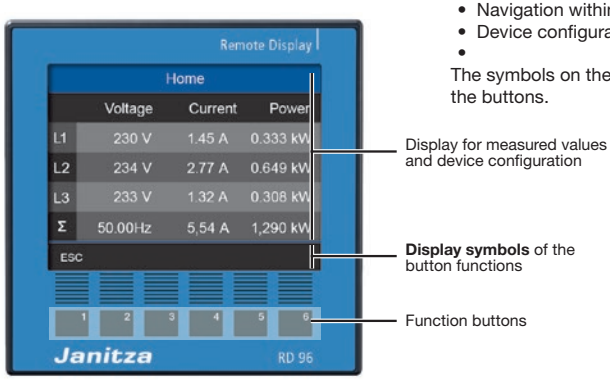

Fig. Standard display, UMG 801 - RD 96

The RD 96 is operated using buttons with corresponding functions:

- Selection of measured value displays.
- Navigation within the menus.
- Device configuration.
-

The symbols on the display show the functions of the buttons.

INFORMATION

Further information on the operation, display and functions of your measurement device and the RD 96 can be found in the respective user manual.

7 Technical data

General	
Net weight	approx. 140 g (0.31 lbs)
Package weight (incl. accessories)	approx. 440 g (0.97 lbs)
Dimensions W x H x D without mounting clamps	96 mm x 96 mm x 30 mm (3.78 in x 3.78 in x 1.18 in)
Backlight service life	40000 h (after 40000 h the backlight goes down to approx. 50%)
Impact resistance	IK07 according to IEC 62262

Transport and storage The following specifications apply for devices transported and stored in the original packaging.	
Free fall	1 m (39.37 in)
Temperature	-25° C (-13 °F) to +70° C (158 °F)
Relative air humidity (non-condensing)	0 to 90% RH

Environmental conditions during operation	
Install the device in a weather-protected and stationary location. Protection class II according to IEC 60536 (VDE 0106, Part 1).	
Rated temperature range	-10 °C (14 °F) to +55 °C (131 °F)
Relative air humidity (non-condensing)	0 to 75% RH
Operating elevation	0-2000 m (6562 ft) above sea level
Pollution degree	2
Mounting orientation	As desired
Ventilation	No forced ventilation required.
Protection against foreign matter and water - Front - Rear - Front with seal	 IP40 according to EN60529 IP20 according to EN60529 IP54 according to EN60529

Serial interface (USB)	
USB 2.0 (type A)	1x
USB 2.0 (type B)	1x
Supply voltage	DC 5 V
Nominal current	200 mA
Operating range	+-5% of nominal range
Power consumption	1 W

USB cable (included in delivery)	
USB 2.0 (type A to type B connector)	1.8 m (1.97 yd)

8 Procedure in the event of a malfunction

Failure mode	Cause	Remedy
No display	External fuse for the supply voltage of the basic device has tripped.	Replace fuse.
	USB cable not connected or connected incorrectly.	Obtain information on the correct USB cable specifications and reconnect the device.
	Basic device does not contain the latest firmware.	Update the firmware of the basic device using the GridVis© software.
Despite the above measures, the device does not function.	Device defective.	Send the device and error description to the manufacturer for inspection.

INFORMATION

In case of a fault, please also observe the particulars in the usage information of the measurement device.

Janitza®