Part. no. 3303911
Doc. no. 2.100.144.1.d 03/2025
www.janitza.com

MID Energy Meter
EMD 485-P1

User manual



The device front may deviate!

Janitza®

Janitza electronics GmbH
Vor dem Polstück 6
D-35633 Lahnau | Germany
Support +49 6441 9642-22
info@janitza.com | www.janitza.com

Introduction

This document provides instructions for installation, operation, and maintenance.

Device description

The energy meter (device) with back-lighted LCD screen is designed for single-phase applications in industrial, utility and residential areas. It measures important electrical parameters like voltage, frequency, current, power, active and reactive energy. The energy measurement is bidirectional, i.e. imported and exported energy are measured separately, so that, for example, the solar gain of a PV system can also be recorded.

The maximum demand (current and power) can be measured over preset periods of up to 60 minutes.

The device provides an RS485 serial port with Modbus RTU protocol for communication and to enable remote monitoring and control of the device.

Intended use

The MID-certified device is intended for the following uses:

- Measurement of power and cumulative energy in accordance with class C EN 50470-3/ ANSI C12-20:2010 in single-phase networks (1p2w).
- Installation in wheather-protected switchboard cabinets and small distribution boards in industrial and residential environments. The mounting orientation is upright.
- For indoor use only.
- Use in accordance with national specifications.

Improper use:

The following is considered improper use in the sense of foreseeable misuse:

- Operation outside the specifications, e.g., regarding operating/measuring voltage or current, environmental specifications, etc.
- Too high or wrong external back-up fuse (see fig. 3).
- Installation in vehicles! Use of the device in non-stationary equipment constitutes an exceptional environmental condition and is only permissible by special agreement.
- Installation in environments with harmful oils, acids, gases, vapors, dusts, radiation, etc.

Safety precautions

- During normal operation, life-threatening voltages may be present at some terminals of this device. Installation, operation, and maintenance must only be carried out by **qualified and trained personnel** in compliance with local regulations.
  Ensure that all power supplies are de-energized before connecting the device or performing any other work.
- After installation, the terminals must not be accessible to the user. The external installation precautions must be sufficient to prevent hazards under fault conditions.
- This device is not intended to function as part of a system that serves as the sole means of protection against faults – good engineering practice requires that each critical function is protected by at least two independent and different means.
- The device does not have an internal fuse. Upstream fuses for line protection are required in all phases. If the circuit is faulty or abnormal, the fuse will blow quickly for line protection and safety.
- Install and operate the device according to the Technical Data specified in this manual.
- If this device is manipulated or used in a manner not specified by the manufacturer, the protection provided by the device may be impaired.

Characteristics

The device can measure and display:

- Grid voltage and frequency
- Current
- Power, maximum power demand, and power factor
- Active energy (imported and exported)
- Reactive energy (imported and exported)

The password-protected setup menu allows to:

- Configure the device, e.g., Modbus parameters, display settings, demand interval time
- Reset the maximum power demand and resettable energy values
- Change the password

Features

- Certified according to the Measuring Instruments Directive (MID) 2014/32/EU
- Up to 100 A direct current measurement
- Bi-directional energy measurement IMP & EXP
- RS485 Modbus RTU for remote monitoring and setup
- Back-lighted LCD display enables good readability
- Two digital inputs as counters
- Din rail mounting 35 mm (DIN EN 60715)
- Accuracy class 0.5 / C active energy

Dimensions

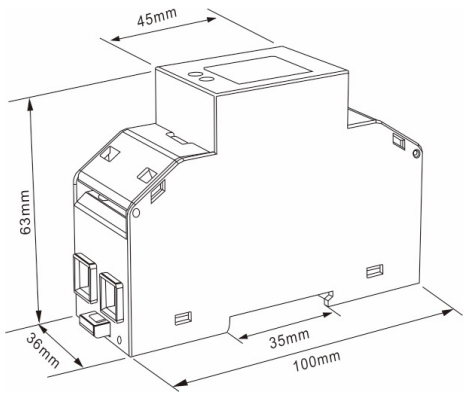

Figure 1. Dimensions

Installation

⚠WARNING

Risk of injury from electrical voltage!
Touching live wires or exposed conductors and touching dangerous device inputs can cause severe physical harm or death.
- **Switch off your installation before starting any work! Secure the equipment against being switched on!**
- **Verify that it is disconnected from power! Ground and short-circuit!**
- **Cover or block any nearby live parts!**

Observe all safety precautions before installation!

- Mount the device on a 35 mm mounting rail in a switchboard cabinet or small distribution board.

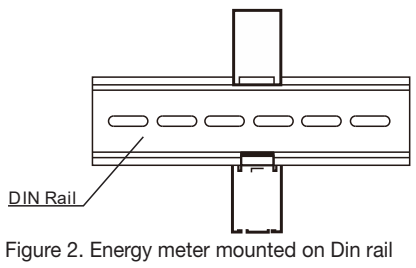

Figure 2. Energy meter mounted on Din rail

- Connect the line inputs to terminals 1-4 as shown in fig. 3. The terminals have 25 mm² connecting capacity.

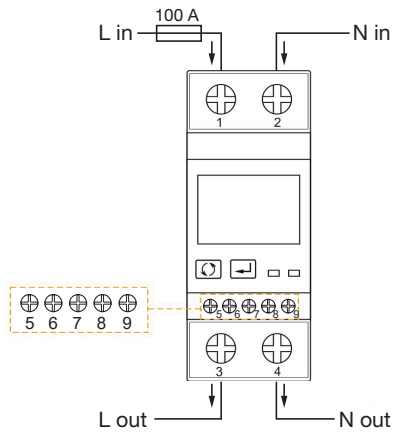

Figure 3. Wiring diagram

- Connect RS485 and/or digital inputs if required.

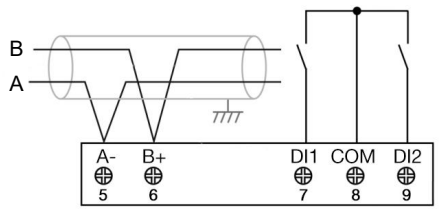

Figure 4. Connection of RS485 and digital inputs

Start-up displays

When it is powered on, the meter initializes and performs a self-check.

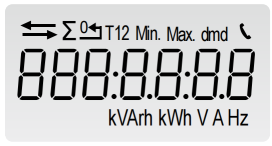

All display segments light up



Self-test ok



Software version



Additional internal version number

*After a short delay, the display shows the measurement display for total active energy (kWh). This is the default display.

Button functions

The buttons operate as follows:



Scroll button: To display the next measurement value.
In setup mode additionally:
To increase the flashing digit.



Enter button (setup mode only):
Press shortly to confirm the digit and select the next digit.
Press and hold for 3 seconds to enter the setting mode and to confirm the entered value.

Measured value displays

To view the next measurement value, press the Scroll button .

Note: You can activate automatic scrolling between the measurement displays in the setup menu. If enabled, each display is shown for an adjustable time until it automatically switches to the next one.



Total active energy
Example: 0.01 kWh



Imported active energy
Example: 0.01 kWh



Exported active energy
Example: 0.00 kWh

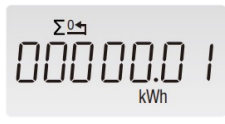

Total resettable active energy
Example: 0.01 kWh



Imported active energy, resettable



Exported active energy, resettable



Total reactive energy
Example: 1.00 kVArh



Imported reactive energy
Example: 0.6 kVArh



Exported reactive energy
Example: 0.4 kVArh



Total reactive energy, resettable
Example: 1.00 kVArh



Imported reactive energy, resettable



Exported reactive energy resettable

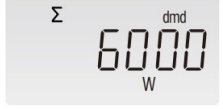

Total maximum power demand
Example: 6000 W



Voltage
Example: 229.8 V



Current
Example: 10 A



Active power
Example: 2297 W

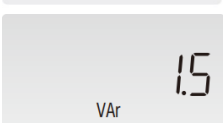

Reactive power
Example: 1.5 VAr

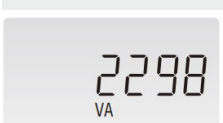

Apparent power
Example: 2298 VA

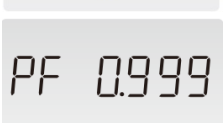

Power factor
Example: 0.999



Frequency
Example: 50.00 Hz

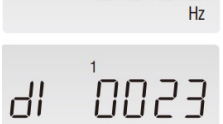

Digital input 1 counter value



Digital input 2 counter value



Modbus address
Example: 003

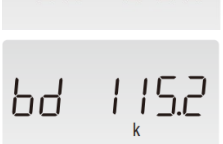

Baud rate
Example: 115200



Continuous running time in total
Example: 0.2 h

Janitza®

Underrange and overrange

Indication on the display

On the voltage, current, and power displays, etc., when the measured values are below the measurement range, the display shows “0”. When the measured values are above the measurement range, two displays alternate. One shows the actual measured value and the other shows “-“ symbols.

Example: If the voltage is exceeded, the display alternates at short intervals between two displays.

Defined thresholds

	Underrange	Overrange
Voltage	< 100 V	> 277 V
Current	< 0.04 A	> 100 A
Power	< 4 W (VAr)(VA)	> 27700 W (VAr) (VA)

Note: The threshold values of underrange and overrange are the secondary values of the meter.

Setting-up the device

The setup menu is password-protected. To enter the setup menu, press the Enter button ↵ for 3 seconds until the password display appears.

Enter the password (default ‘1000’):

Press ↻ to increase the flashing digit.

Press ↵ to confirm the digit setting and to enter the next digit.

To confirm the password and to enter the setup menu, press ↵ for 3 seconds.

If an incorrect password is entered, the display shows **PAS 0000** again.

To exit the setup menu, wait for about 60 seconds without pressing any button.

Note: You can use the PC software GridVis® for remote monitoring, analysis and visualization of the measured data. The device must be connected to the PC via an Ethernet Modbus gateway (RS485 Modbus RTU to TCP) or via an USB to RS485 converter.

Setup menu



Enter password

To enter setup mode, enter the password.

Default password: 1000



Modbus address

Default ID is 001

Range: 001 .. 247



Press the Enter button, the first digit flashes.

Press the Scroll button to change the value. After choosing the new address value, press the Enter button to confirm the setting.



Baud rate

Default value: 9600 bps

Range: 1200, 2400, 4800, 9600, 19200, 38400, 115200 bps.



Press the Enter button, the red digit flashes.

Press the Scroll button to change the value. After choosing the new baud rate, press the Enter button to confirm the setting.

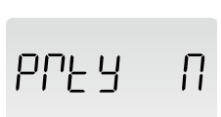

Parity

Default: None

Options: None, Even, Odd.



Press the Enter button, the red part flashes.

Press the Scroll button to change the value.

After choosing the parity, press the Enter button to confirm the setting.



Demand Integration Time (DIT)

Interval for maximum power demand. The overall highest value of an interval is stored until the power demand is reset.

Default: 15 minutes

Options: 5 / 10 / 15 / 30 / 60 / OFF.



Press the Enter button, the red part flashes.

Press the Scroll button to change the value.

After choosing the DIT interval, press the Enter button to confirm the setting.



Automatic scrolling (screen display time)

Default: 0 s (off)

Range: 0 .. 30 s



Press the Enter button, the red part flashes.

Press the Scroll button to change the value.

After choosing the “Scrl” option, press the Enter button to confirm the setting.



Backlight lasting period

Default: 60 min after the last button press.

Options: OFF / 5 / 10 / 20 / 30 / 60 min.

OFF = the display is always backlighted.



Press the Enter button, the red part flashes.

Press the Scroll button to change the value.

After choosing the value, press the Enter button to confirm the setting.



Clearing values of maximum power demand and resettable energy

Press the Enter button for 3 seconds to access the reset screen.



Press the Enter button again for 3 seconds to confirm the reset.



Set password

Default: 1000



Press the Enter button, the red digit flashes.

Press the Scroll button to change the value.

After choosing the new password, press the Enter button to confirm the setting.



Filter time of digital inputs

Default: 100 ms

The meter only counts pulses whose duration is longer than the set filter time.



Press the Enter button, the red part flashes.

Press the Scroll button to change the value.

After choosing the new filter time, press the Enter button to confirm the setting.

Technical data

General	
Net weight	approx. 182 g (0.40 lbs)
Total weight (incl. packaging)	approx. 213 g (0.47 lbs)
Width in horizontal pitches	2 HP (1 HP = 18 mm)
Power consumption	approx. 1 W
Fuse, external	100 A fast
Warm-up time	5 s
Backlight service life	10 years (50% of the start brightness)
Digital inputs	2 counters
Optical pulse output LED for total active energy	1000 imp/kWh
Material	self-extinguishing UI94 V-0

Environmental conditions	
Install the device in a weather-protected and stationary location.	
Protection class II according to IEC 60536 (VDE 0106, Part 1).	
Rated temperature range (operation and storage)	-40 °C (-40 °F) .. +70 °C (158 °F)
Relative air humidity	0 .. 90%, no condensation
Operating altitude	0 .. 2000 m (6562 ft) above sea level
Pollution degree	2
Mounting orientation	Upright
Ventilation	No forced ventilation required.
Protection rating: Front panel / other areas	IP51 / IP20
Vibration	10 .. 50 Hz, IEC 60068-2-6, 2g
Shock	up to 30 kg of shock to the front, back and sides

Voltage and current measurement	
Nominal voltage	230 V AC
Measuring range L-N	100 .. 277 V AC
Supported grid systems	1p2w
Measurement category (IEC 61010-1)	300 V CAT III
AC withstand voltage; Pulse withstand voltage	4 kV for 1 minute; 6 kV-1.2 uS waveform
Measuring range	0.15 .. 10 (100) A_{eff}
Maximum current	100 A
Nominal current	10 A
Minimum current	0.15 A
Starting current	0.04 A
Crest factor (relative to maximum current)	10
Overload for 0.01 s	3000 A
Resolution	1 mA
Overvoltage category	III
Rated surge voltage	4 kV

Power factor, frequency and maximum demand	
Frequency	50 / 60 Hz (±10 %)
Instantaneous values: - Active power - Reactive power - Apparent power	 0 .. 999999 W 0 .. 999999 VAr 0 .. 999999 VA
Maximum demanded power since last demand reset	
Power factor range	-1.0 .. 1.0

Energy Measurements	
Imported/exported active energy	0 .. 9999999.9 kWh
Imported/exported reactive energy	0 .. 9999999.9 kVArh
Total active energy	0 .. 9999999.9 kWh
Total reactive energy	0 .. 9999999.9 kVArh

Accuracy	
Accuracy class	MID Class C
Voltage	0.5 % of the max. range
Current	0.5 % of nominal current
Frequency	0.2 % of the mid frequency
Power factor	1 % of the unit (0.01)
Active power (W)	±1 % of the max. range
Reactive power (VAr)	±1 % of the max. range
Apparent power (VA)	±1 % of the max. range
Active energy (Wh)	Class 0.5 - IEC 62053-21 Class C - EN 50470-3
Reactive energy (VARh)	Class 2 - IEC 62053-23
Response time to digital input	100 ms, typical, to > 99 % of final reading, at 50 Hz

Connecting capacity of the terminals	
Connectible conductors. Only connect one conductor per terminal point!	
Single core, multi-core, fine-stranded, wire ferrules	
Voltage/current measurement	4 .. 25 mm² (AWG4)
Other terminals	0.5 .. 2.5 mm² (AWG14)

Reference conditions of influencing quantities	
Influencing quantities are variables that affect measurement errors to a minor degree. Accuracy is verified under nominal value (within the specified tolerance) of these conditions.	
Ambient temperature	23 °C ±1 °C
Input frequency	50 or 60 Hz ±2 %
Input waveform	Sinusoidal (distortion factor < 0.005)
Magnetic field of external origin	Terrestrial flux

RS485 port for Modbus RTU	
The following RS485 communication parameters can be configured from the setup menu:	
Baud rate (bps)	2400, 4800, 9600, 19.2k, 38.4k, 115.2k (default: 9600)
Parity	none (default)/odd/even
Stop bits (cannot be set separately, only via Modbus)	0 = one stop bit and no parity, default 1 = one stop bit and even parity 2 = one stop bit and odd parity 3 = two stop bits and no parity
RS485 network address	3-digit number, 001 .. 247
The byte order is high byte/low byte (“big-endian”, not configurable).	

Troubleshooting

Failure	Cause	Remedy
No display	External fuse for the supply voltage has tripped.	Replace fuse.
No current display.	No measured voltage connected.	Check connection and correct if necessary.
	No measured current connected.	Check connection and correct if necessary.
Displayed voltage is too high or too low.	Overrange.	**Attention!** Make sure that the measuring inputs are not overloaded.
	The voltage peak value at the measuring input was exceeded due to harmonics current.	**Attention!** Make sure that the measuring inputs are not overloaded.
Despite the above measures, the device does not function.	Device defective.	Send the device and error description to the manufacturer for inspection.

Maintenance and service

Use a dry, soft cloth to clean the device and the display. Do not use water or other solvents for cleaning as this may damage the device.

Repair and calibration of the device must only be carried out by the manufacturer or an accredited laboratory! The manufacturer recommends calibrating the device every 5 years!

For questions or in case of failures not described above, please contact the manufacturer. A warranty is only assumed for unopened devices with intact safety seal.

Disposal

Please abide by national regulations! Dispose of individual parts, as applicable, depending on their composition and existing country-specific regulations (e.g. as electronic waste, plastics, metals) or engage a certified disposal company to handle scrapping.

Additional documentation, e.g., the Modbus address list, can be found on our website **www.janitza.com** under Downloads.

Janitza®