Smart Energy & Power Quality Solutions

Art. Nr. 3303806

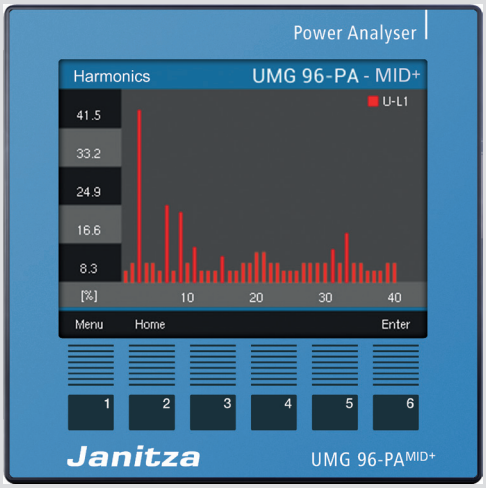

The device fronts may differ!

Power Analyzer

UMG 96-PA

(from Firmware 3.41)

UMG 96-PA^{MID+}

(from Firmware 3.41)

Data sheet

Doc. no. 2.061.082.1.a 03/2023

Janitza®

DEVICE VIEWS

The figures are for illustration purposes only and are not to scale.

Front view

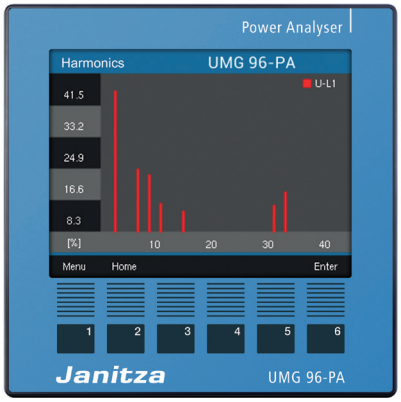

Rear view

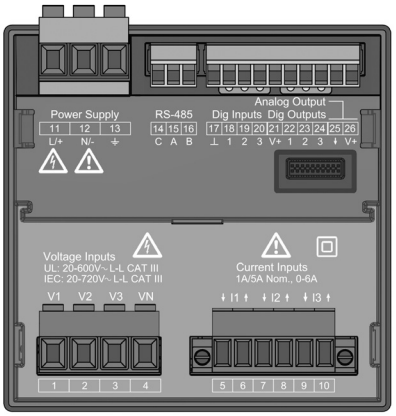

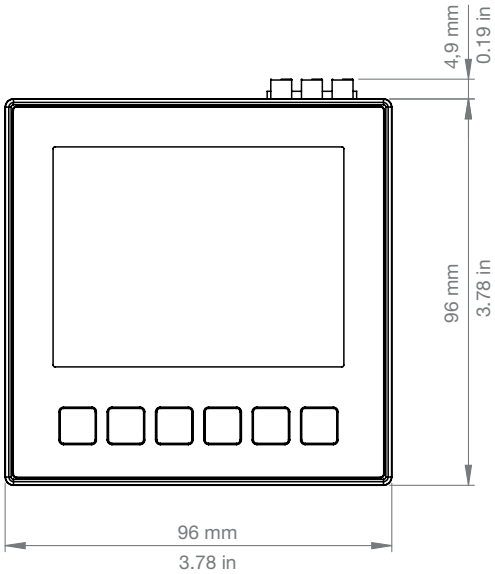

Side view

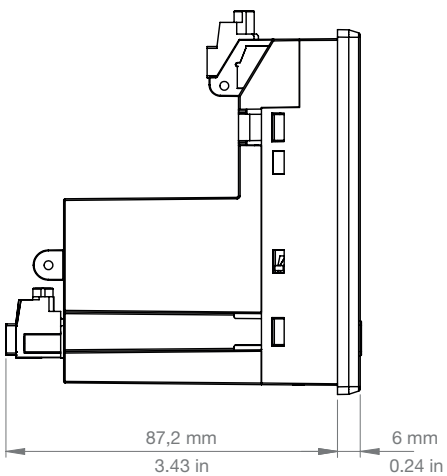

Bottom view

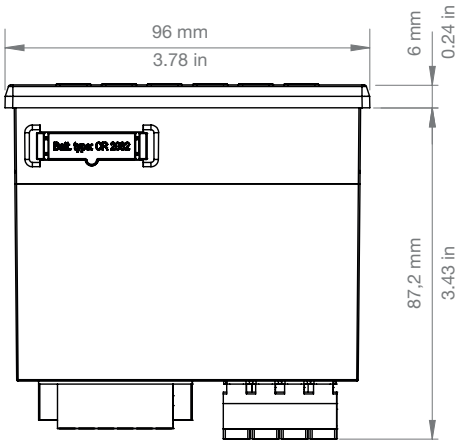

Cut-out size:
$92^{+0,8}$ mm x $92^{+0,8}$ mm.
($3.62^{+0.03}$ x $3.62^{+0.03}$ in)

TECHNICAL DATA

General	
Net weight (with attached plug-in connectors)	approx. 250 g (0.55 lbs)
Package weight (incl. accessories)	approx. 500 g (1.1 lbs)
Battery	Type Lithium CR2032, 3 V, (UL 1642 approved)
Data memory	8 MB
Backlight service life	40000 h (backlight reduces to approx. 50% over this period)
Impact resistance	IK07 according to IEC 62262

Transport and storage The following information applies to devices that are transported or stored in their original packaging.	
Free fall	1 m (39.37 in)
Temperature	-25 °C (-13 °F) to +70 °C (158 °F)
Relative air humidity (non-condensing)	0 to 90% RH

Environmental conditions during operation	
Install the device in a weather-protected and stationary location. Protection class II according to IEC 60536 (VDE 0106, Part 1).	
Rated temperature range	-10 °C (14 °F) ... +55 °C (131 °F)
Relative air humidity (non-condensing)	0 to 75% RH
Operating elevation	0 .. 2000 m (1.24 mi) above sea level
Pollution degree	2
Mounting orientation	As desired
Ventilation	No forced ventilation required.
Protection against foreign matter and water - Front - Rear - Front with seal	 IP40 according to EN60529 IP20 according to EN60529 IP54 according to EN60529
Electromagnetic environmental conditions	class E2 (MID 2014/32/EU)
Mechanical environmental conditions	class M1 (MID 2014/32/EU)

Supply voltage		
Option 230 V	Nominal range	AC 90 V - 277 V (50/60 Hz) or DC 90 V - 250 V, 300 V CATIII
	Power consumption	max. 4.5 VA / 2 W
Option 24 V *	Nominal range	AC 24 V - 90 V (50/60Hz) or DC 24 V - 90 V, 150 V CATIII
	Power consumption	max. 4.5 VA / 2 W
Operating range	+-10% of nominal range	
Internal fuse, not replaceable	Type T1A / 250 V DC / 277 V AC according to IEC 60127	
Recommended overcurrent protective device for the line protection (UL approval)		Option 230 V: 6 - 16 A (Char. B) Option 24 V: 1 - 6 A (Char. B)

* **The 24 V option only applies to the UMG 96-PA!**

Voltage measurement	
3-phase 4-conductor systems with rated voltages up to	417 V / 720 V (+-10%) according to IEC 347 V / 600 V (+-10%) according to UL **MID: see table „Technical data for the MID+ certified measuring device“.**
3-phase 3-conductor systems with rated voltages up to	600 V (+-10%)
Single-phase 2-conductor system with rated voltages up to	480 V (+-10%)
Overvoltage category	600 V CAT III, 300 V CAT IV
Rated surge voltage	6 kV
Protection of the voltage measurement	1 - 10 A tripping characteristic B (with IEC/UL approval)
Measuring range L-N	0[1)] ... 600 V_{rms} (max. overvoltage 800 V_{rms})
Measuring range L-L	0[1)] ... 1040 V_{rms} (max. overvoltage 1350 V_{rms})
Resolution	0.01 V
Crest factor	2.45 (related to the measuring range)
Impedance	3 MΩ/phase
Power consumption	approx. 0.1 VA
Sampling frequency	8.13 kHz
Frequency of the fundamental oscillation - Resolution	45 Hz .. 65 Hz 0.01 Hz
Fourier analysis	1st - 40th harmonic

1) The device only determines measured values if a voltage L1-N of greater than 20 Veff (4-conductor measurement) or a voltage L1-L2 of greater than 34 Veff (3-conductor measurement) is applied to voltage measurement input V1.

Current measurement	
Nominal current	5 A
Measurement range	0.005 .. 6 A_{rms}
Crest factor	2 (relative to 6 A_{rms})
Overvoltage category	300 V CAT II
Rated surge voltage	2,5 kV
Power consumption	approx. 0.2 VA (Ri=5 mΩ)
Overload for 1 s	60 A (sinusoidal)
Resolution	0.1 mA (display 0.01 A)
Sampling frequency	8.13 kHz
Fourier analysis	1st - 40th harmonic

Technical data for the MID+ certified measuring device	
Voltage range	3 x 57.7/100 V ... 3 x 289/500 V [1)]
Current range	0.002 ... 6 A
Frequency range	45-65 Hz
Reference frequency	50 Hz
Accuracy class	B
Pulse valency S0 (puls constant)	10000 pulses/kWh [2)]
Electromagnetic compatibility	class E2 (MID 2014/32/EU)
Mechanical compatibility	class M1 (MID 2014/32/EU)
Suitable grid systems	1p2w, 3p3w, 3p4w

1) When measuring voltage using a voltage converter, the following applies to the UMG 96-PA-MID+:
Use calibrated / permissible voltage transformers for a MID-compliant measurement (secondary: 3 x 57.7 / 100 V - 3 x 289/500 V).
2) The pulse valency S0 is automatically adapted to the voltage transformer ratio that has been set.The momentary pulse valency S0 appears in the *Active energy* measuring display.

Serial interface	
RS-485 - Modbus RTU/Slave	9.6 kbps, 19.2 kbps, 38.4 kbps, 57.6 kbps, 115.2 kbps

Digital outputs 3 digital outputs, solid state relays, not short-circuit proof.	
Switching voltage	max. 33 V AC, 40 V DC
Switching current	max. 50 mA_{eff} AC/DC
Response time	approx. 200 ms
Pulse output	max. 50 Hz (energy pulses)
UMG 96-PA-MID+: The measured value „active energy“ (applied/delivered) is assigned to digital output 1 (terminal 21/22).	

Digital inputs 3 digital inputs, solid state relays, not short-circuit proof.	
Maximum counter frequency	20 Hz
Input signal applied	18 V .. 28 V DC (typically 4 mA)
Input signal not applied	0 .. 5 V DC, current less than 0.5 mA

Cable length (digital inputs/outputs)	
Up to 30 m (32.81 yd)	Unshielded
Greater than 30 m (32.81 yd)	Shielded

Analog outputs	
External power supply	max. 33 V
Current	0 .. 20 mA
Update time	1 s
Load	max. 300 Ω
Resolution	10 bit

Connecting capacity of the terminals (supply voltage) Connectible conductors. Only connect one conductor per terminal point!	
Single core, multi-core, fine-stranded	0.2 - 4.0 mm^2, AWG 28-12
Wire ferrules (non-insulated)	0.2 - 2.5 mm^2, AWG 26-14
Wire ferrules (insulated)	0.2 - 2.5 mm^2, AWG 26-14
Tightening torque	0.4 - 0.5 Nm (3.54 - 4.43 lbf in)
Strip length	7 mm (0.2756 in)

Connecting capacity of the terminals (voltage measurement) Connectible conductors. Only connect one conductor per terminal point!	
Single core, multi-core, fine-stranded	0.2 - 4.0 mm^2, AWG 28-12
Wire ferrules (non-insulated)	0.2 - 2.5 mm^2, AWG 26-14
Wire ferrules (insulated)	0.2 - 2.5 mm^2, AWG 26-14
Tightening torque	0.4 - 0.5 Nm (3.54 - 4.43 lbf in)
Strip length	7 mm (0.2756 in)

Connecting capacity of the terminals (current measurement) Connectible conductors. Only connect one conductor per terminal point!	
Single core, multi-core, fine-stranded	0.2 - 4 mm², AWG 28-12
Wire ferrules (non-insulated)	0.2 - 2.5 mm², AWG 26-14
Wire ferrules (insulated)	0.2 - 2.5 mm², AWG 26-14
Tightening torque	0.4 - 0.5 Nm (3.54 - 4.43 lbf in)
Strip length	7 mm (0.2756 in)

Terminal connection capacity (serial interface) Connectible conductors. Only connect one conductor per terminal point!	
Single core, multi-core, fine-stranded	0.2 - 1.5 mm², AWG 28-16
Wire ferrules (non-insulated)	0.2 - 1.5 mm², AWG 26-16
Wire ferrules (insulated)	0.2 - 1.5 mm², AWG 26-16
Tightening torque	0.2 - 0.25 Nm (1.77 - 2.21 lbf in)
Strip length	7 mm (0.2756 in)

Connecting capacity of the terminals (digital inputs/outputs, analog output) Connectible conductors. Only connect one conductor per terminal point!	
Single core, multi-core, fine-stranded	0.2 - 1.5 mm², AWG 28-16
Wire ferrules (non-insulated)	0.2 - 1.5 mm², AWG 26-16
Wire ferrules (insulated)	0.2 - 1.5 mm², AWG 26-16
Tightening torque	0.2 - 0.25 Nm (1.77 - 2.21 lbf in)
Strip length	7 mm (0.2756 in)

FUNCTION PERFORMANCE CHARACTERISTICS

Function	Symbol	Accuracy class	Measurement range	Display range
Total active power	P	0.5[5] (IEC61557-12)	0 W .. 12.6 kW	0 W .. 999 GW *
Total reactive power	QA, Qv	1 (IEC61557-12)	0 var .. 16.6 kvar	0 var .. 999 Gvar *
Total apparent power	SA, Sv	0.5[5] (IEC61557-12)	0 VA .. 12.6 kVA	0 VA .. 999 GVA *
Total active energy	Ea	0.2[5] (IEC61557-12) 0.2S[5] (IEC62053-22) 0.2[6] (ANSI C12.20)	0 Wh .. 999 GWh	0 Wh .. 999 GWh *
Total reactive energy	ErA, ErV	1 (IEC61557-12)	0 varh .. 999 Gvarh	0 varh .. 999 Gvarh *
Total apparent energy	EapA, EapV	0.5[5] (IEC61557-12)	0 VAh .. 999 GVAh	0 VAh .. 999 GVAh *
Frequency	f	0.05 (IEC61557-12)	45 Hz .. 65 Hz	45.00 Hz .. 65.00 Hz
Phase current	I	0.2 (IEC61557-12)	0 Arms .. 7 Arms	0 A .. 999 kA
Neutral conductor current calculated	INc	1.0 (IEC61557-12)	0.03 A .. 25 A	0.03 A .. 999 kA
Voltage	U L-N	0.2 (IEC61557-12)	10 Vrms .. 600 Vrms	0 V .. 999 kV
Voltage	U L-L	0.2 (IEC61557-12)	18 Vrms .. 1040 Vrms	0 V .. 999 kV
Power factor	PFA, PFV	0.5 (IEC61557-12)	0.00 .. 1.00	0.00 .. 1.00
Short-term flicker, long-term flicker	Pst, Plt	-	-	-
Voltage dips (L-N)	Udip	-	-	-
Voltage swells (L-N)	Uswl	-	-	-
Transient overvoltages	Utr	-	-	-
Voltage interruptions	Uint	-	-	-
Voltage imbalance (L-N) [1]	Unba	-	-	-
Voltage imbalance (L-N) [2]	Unb	-	-	-
Voltage harmonics	Uh	Cl. 1 (IEC61000-4-7)	1 .. 40.	0 V .. 999 kV
THD of voltage [3]	THDu	1.0 (IEC61557-12)	0% .. 999%	0% .. 999%
THD of voltage [4]	THD-Ru	-	-	-
Current harmonics	Ih	Cl. 1 (IEC61000-4-7)	1 .. 40.	0 A .. 999 kA
THD of current [3]	THDi	1.0 (IEC61557-12)	0% .. 999%	0% .. 999%
THD of current [4]	THD-Ri	-	-	-
Mains signal voltage	MSV	-	-	-

1) Referenced to the amplitude.
2) Referenced to the phase and amplitude.
3) Referenced to the fundamental oscillation.
4) Referenced to the effective value.
5) Accuracy class 0.2/0.2S with ../5A transformer.
Accuracy class 0.5/0.5S with ../1A transformer.
6) UMG 96-PA only.
*When the maximum total energy values are reached, the display returns to 0 W.

INFORMATION

Detailed information on the device functions and data can be found in the usage information that is enclosed with the device or is available for download at www.janitza.de!

Janitza electronics GmbH
Vor dem Polstück 6 | 35633 Lahnau
Germany

Tel.: +49 6441 9642-0
info@janitza.com | www.janitza.com

Janitza®