

# Art. Nr.: 13043
# ASK 41.4

| | |
|---|---|
| Primary Current: | 100 |
| Secondary Current: | 5 |
| Burden (VA): | 1,5 |
| Accuracy Class: | 1 |

## Dimensions:

| | |
|---|---|
| Bus bar 1 in mm: | 40x10 |
| Bus bar 2 in mm: | 2x30x5 |
| Round conductor in mm: | 32 |
| Width in mm: | 70 |
| Height in mm: | 88,5 |
| Depth in mm: | 58 |

## Technical Data:

Therm. nominal continuous current $I_{cth}$: 1,0 x $I_{pr}$
Therm. nominal short-time current $I_{th}$: 60 x $I_{pr}$, 1 Sek.
Max. operating voltage $U_m$: 0,72 kV
Isolation test voltage: 3 kV, $U_{eff}$, 50 Hz, 1 Min.
Nominal rated frequency: 50/60 Hz
Isolation class: E

## General Technical Data:

| | |
|---|---|
| Over-current limiting factor: | See rating plate |
| Working temperature range: | -5°C < T < +50°C |
| Storage temperature range: | -25°C < T < +70°C |
| Unbreakable plastic housing made of black polycarbonate | Flame resistant, ultrasonically welded |
| Nickel-plated secondary terminals with plus-minus nickel-plated screws | M5x10mm |
| Custom tariff number | 85043129 |
| Applied standards 1 | DIN EN 61869-1/2 |
| Applied standards 2 | DIN EN 42600-1/2 |

## Technical Drawing:

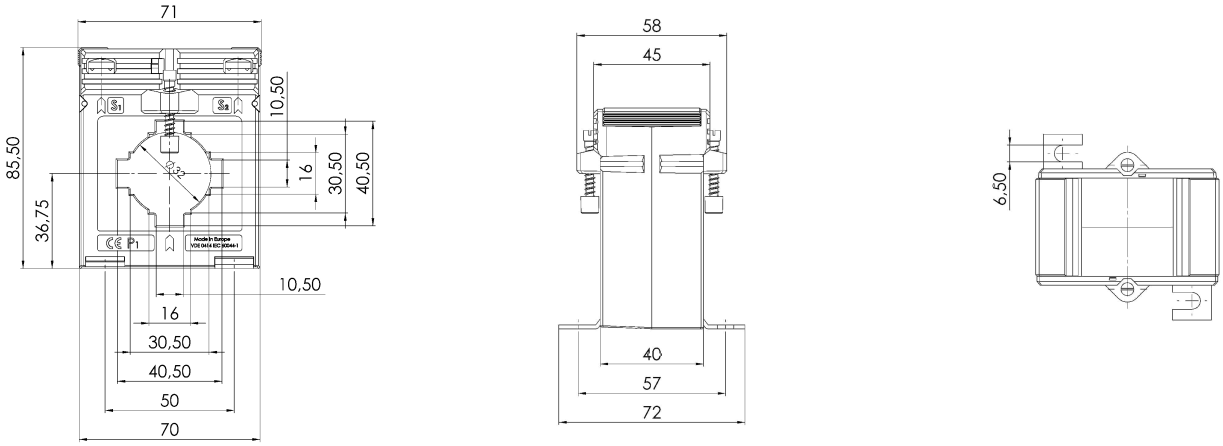

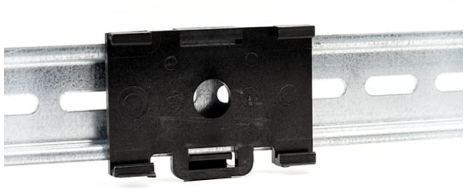

**Contact:**
MBS AG & Co. KG - Eisbachstrasse 51 - D-74429 Sulzbach-Laufen - www.mbs-ag.com
Tel.: +49 7976 9851-0 - Telefax: +49 7976 9851-90 - verkauf@mbs-ag.com

Date: 23.06.2026