

Art. Nr.: 13036
ASK 41.4

Primary Current:	50
Secondary Current:	5
Burden (VA):	1,5
Accuracy Class:	1

Dimensions:

Bus bar 1 in mm:	40x10
Bus bar 2 in mm:	2x30x5
Round conductor in mm:	32
Width in mm:	70
Height in mm:	88,5
Depth in mm:	58

Technical Data:

Therm. nominal continuous current I_{cth}: 1,0 x I_{pr}
Therm. nominal short-time current I_{th}: 60 x I_{pr}, 1 Sek.
Max. operating voltage U_m: 0,72 kV
Isolation test voltage: 3 kV, U_{eff}, 50 Hz, 1 Min.
Nominal rated frequency: 50/60 Hz
Isolation class: E

General Technical Data:

Over-current limiting factor:	See rating plate
Working temperature range:	-5°C < T < +50°C
Storage temperature range:	-25°C < T < +70°C
Unbreakable plastic housing made of black polycarbonate	Flame resistant, ultrasonically welded
Nickel-plated secondary terminals with plus-minus nickel-plated screws	M5x10mm
Custom tariff number	85043129
Applied standards 1	DIN EN 61869-1/2
Applied standards 2	DIN EN 42600-1/2

Technical Drawing:

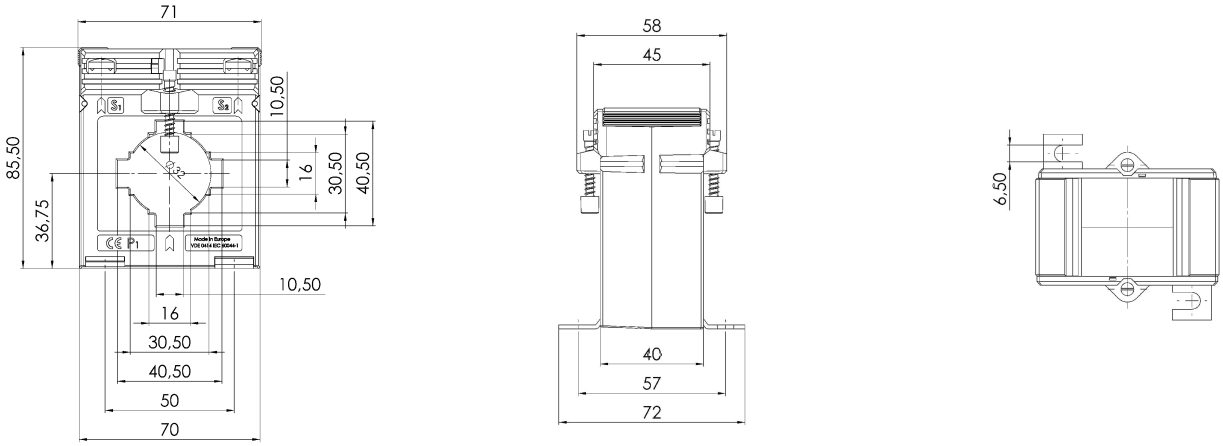

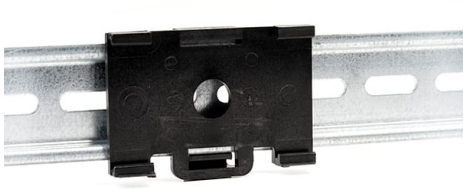

Contact:
MBS AG & Co. KG - Eisbachstrasse 51 - D-74429 Sulzbach-Laufen - www.mbs-ag.com
Tel.: +49 7976 9851-0 - Telefax: +49 7976 9851-90 - verkauf@mbs-ag.com

Date: 23.06.2026