LUXO

LFM LED G2 T105 Wh 700 840 3D CLA EU



LFM LED is a lightweight magnifier with an all-metal construction, LED light sources, and a flexible spring-balanced arm in the Luxo tradition.

Item No.	LFG028194
GTIN	7040670281944
Stock status code	A

Technical specifications

Mounting	
Product Mounting	Table

General	
Product shape	Special

Electrical Data	
Leakage Current (mA)	0.1
Main Feed AC (V) Min	220
Main Feed AC (V) Max	240
Main Feed Frequency Min	50
Main Feed Frequency Max	60
Total Consumption (W)	9

Magnifier	
Primary Lense	3
Magnification	175
Magnifier Focal Distance	330
Focal Length	330
Magnifier Lux Work distance	2100
Arm length	105

Technical Data	
IP classification	40

Light Technical Data	
Light source	LED
Lumen Out (lm)	686
Number Of Light Source	1
Lumen Per Watt (lm/W)	76
Lamp colour temp (K)	4000
Colour Rendering Index	>80
MacAdam step	3
Energy Class Light Source	E

Lifetime	
LED Lifetime L80B50 Ta25 (h)	50 000
Luminous flux decline (LLMF) 50.000h Ta25	0.80

Housing	
Body Colour	WH - White
Main Body Colour Name	White
Magnifier Lense Material	Glass

Dimensions	
Height (mm)	45
Diameter (mm)	200
Item Net Weight (kg)	2.8152

Termination	
Plug Type	EU

Logistic Data	
Item Gross Weight (kg)	3.06

The Company reserves the right to change any product specifications without prior notification.

Illustrations

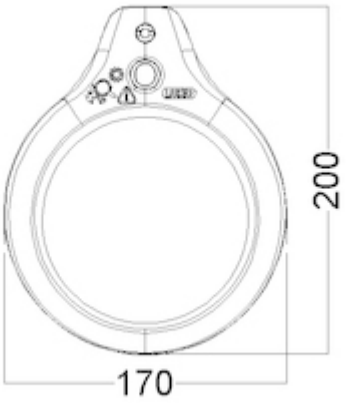

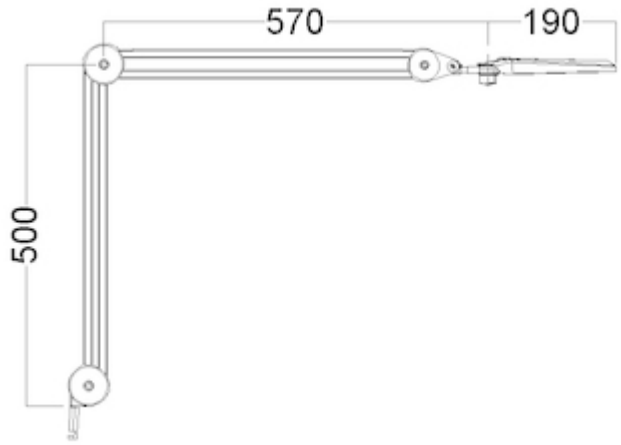

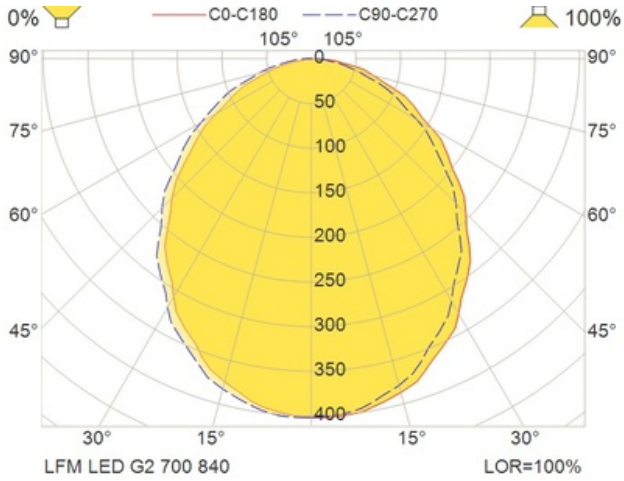
0%
C0-C180
C90-C270
100%
105°
105°
90°
75°
60°
45°
0
50
100
150
200
250
300
350
400
30°
15°
15°
30°
LFM LED G2 700 840
LOR=100%