luminell®
Light Matters

Glamox

Installation and User Instructions

RLX B G2

Floodlight and Walkway light





Dec 2023

Revision 6.0
Item number: 22154203
EN

CE

DISCLAIMER

Glamox makes no representations or warranties with respect to this manual and, to the maximum extent permitted by law, expressly limits its liability for breach of any warranty that may be implied to the replacement of this manual with another. Furthermore, Glamox reserves the right to revise this publication at any time without incurring an obligation to notify any person of the revision.

The information provided in this documentation contains general descriptions and/or technical characteristics of the performance of the products contained herein. This documentation is not intended as a substitute for and is not to be used for determining suitability or reliability of these products for specific user applications. It is the duty of any such user or integrator to perform the appropriate and complete risk analysis, evaluation and testing of the products with respect to the relevant specific application or use thereof. Neither Glamox nor any of its affiliates or subsidiaries shall be responsible or liable for misuse of the information that is contained herein. If you have any suggestions for improvements or amendments or have found errors in this publication, please notify us.

All pertinent state, regional, and local safety regulations must be observed when installing and using this product. For reasons of safety and to help ensure compliance with documented system data, only the manufacturer shall perform repairs to components.

Failure to observe this information can result in injury or equipment damage.

Copyright © 2023 by Glamox

All rights reserved. No part of this publication may be reproduced, distributed, or transmitted in any form or by any means, including photocopying, recording, or other electronic or mechanical methods, without the prior written permission of the publisher. For permission requests, write to the publisher, addressed “Attention: Permissions Coordinator,” at the address below.

Glamox AS
Borgundfjordvegen 116, 6017 Aalesund, Norway
+47 71 25 04 00
www.glamox.com

TRADEMARKS

Glamox has made every effort to supply trademark information about company names, products and services mentioned in this manual. Trademarks shown below were derived from various sources. All trademarks are the property of their respective owners.

General Notice: Some product names used in this manual are used for identification purposes only and may be trademarks of their respective companies.

Product Modifications

Year	Type	Modifications
2023	S1	Product released

Document Revisions

Date	Version Number	Document Changes
29-11-2023	1.0	First edition
08-12-2023	2.0	EU DoC updated
19-12-2023	3.0	PE contact email
20-02-2024	4.0	Safe compass distance added
20-02-2024	5.0	Replaced email with website
26-03-2024	6.0	Spare part name updated

luminell®
Light Matters

Table of Contents

1 Preface 5
2 Description of the product 7
3 Safety Instructions 12
4 Preparation 14
5 Operation 20
6 Maintenance 21
7 Repair and replacement of parts 22
8 Disassembly and disposal 23
9 Appendix I – supplied accessories and spare parts 25
10 Appendix II - CE Declaration of Conformity 26
11 Glossary 27
12 Related documentation 27

1 Preface

1.1 Description of the User

The luminaires shall only be installed in a professional and legal manner by qualified personnel. This document is intended for the purchaser, installer, maintenance personnel and end user.

1.2 Explanation of Safety Warnings and Graphical Symbols

Symbol	Meaning
⚠DANGER	Danger indicates a hazard with a high level of risk which, if not avoided, will result in death or serious injury.
⚠WARNING	Warning indicates a hazard with a medium level of risk which, if not avoided, could result in death or serious injury.
⚠CAUTION	Caution indicates a hazard with a low level of risk which, if not avoided, could result in minor or moderate injury.
NOTICE	Indicates information considered important, but not hazard related.
	Warns of potential danger, e.g. crushing hazard.
	Warns of optical radiation.
CE	The CE Marking on the product is the manufacturer's declaration that the product complies with the essential requirements of the relevant European health, safety, and environmental protection legislation.
	This symbol on the product or packaging indicates that the device has a ground wire connection.
	To identify any terminal which is intended for connection to an external conductor for protection against electric shock in case of a fault, or the terminal of a protective earth (ground) electrode.
	The symbol on the product, the accessories or packaging indicates that this device must not be treated as unsorted municipal waste, but must be collected separately.
	Read and understand the user manual and its safety instructions before using this product.

1.3 Retaining Instructions

Read and understand this manual and its safety instructions before using this product. Failure to do so can result in serious injury or death.

Follow all the instructions. This will avoid fire, explosions, electric shocks or other hazards that may result in damage to property and/or severe or fatal injuries.

The product shall only be used by persons who have fully read and understand the contents of this user manual.

Ensure that each person who uses the product has read these warnings and instructions and follows them.

Keep all safety information and instructions for future reference and pass them on to subsequent users of the product.

The manufacturer is not liable for cases of material damage or personal injury caused by incorrect handling or non-compliance with the safety instructions. In such cases, the warranty will be voided.

1.4 Obtaining Documentation and Information

1.4.1 Internet

The latest version of the documentation is available at the following website:
http://www.glamox.com

1.4.2 Other languages

This is the English user manual. Manuals in other languages are available upon request.

1.4.3 Feedback

Product or documentation feedback can be sent to sales.gne@glamox.com

We appreciate your comments.

1.4.4 Support and service

Please visit https://www.glamox.com/global-marine/contact/ for contact information.
Phone: +47 71 25 04 00

2 Description of the product

2.1 Intended Use and Reasonably Foreseeable Misuse

The RLX B G2 is intended to be used as an outdoor floodlight for marine and other harsh environments. The product is designed specifically to illuminate outdoor work environments and walkways on vessels or permanent installations where exposure to sea water, wind, vibration and fluctuating temperatures are to be expected.

The RLX B G2 shall not be used as lighting for hazardous areas not specified by Glamox that would typically require standard certifications. This includes installations in explosive hazard zones, underground mining operations, or other extreme environments involving high concentrations of dust, explosive gas, complete liquid submersion over longer periods of time (IPX8) as well as any installation that would exceed ambient operating temperature limits.

The RLX B G2 walkway beam fixtures are intended for use on permanent walkways, bridges and gangways, walk-to-work gangways, as well as vessel-to-shore gangways.

2.2 Technical Data

2.2.1 Technical data of luminaires

Technical data of luminaires			
Parameter	**Flood beam luminaires (white)**	**Flood beam luminaires (colour)**	**Walkway beam luminaires**
Product type	Luminaire		
Device name	RLX B G2		
Technical life span	L70 @ 45°C: 100 000hrs		
Designation	Outdoor floodlight	Outdoor floodlight for special applications	Outdoor walkway light
Energy consumption	40 W	20 W	26 W
Inrush current	18A	On request	13A
Supply voltage	19-32 V DC	19-32 V DC	19-32 V DC
Lumen	3600 - 4400 lm	On request	approx. 2000 lm
Light quality	5000Kelvin, CRI80	Red, Blue, Green	5000Kelvin, CRI80

Technical data of luminaires (continued)			
Parameter	**Flood beam luminaires (white)**	**Flood beam luminaires (colour)**	**Walkway beam luminaires**
Beam options	MB30 MB50 WB90	MB50	WBA XWBA
Luminaire module weight	~ 1.3 kg	~ 1.3 kg	~ 1.7 kg
Safe compass distance IEC 60945	25cm		
Rated ambient operation temperature	-40 to +55 °C		
Ingress protection rating	IP66/67		
Housing material	Anodized and powder coated aluminium, sea water resistant		
Bracket material	Stainless steel, sea water resistant		

2.3 Product designation key

2.3.1 luminaires

Example: RLX B FL 40W24VDC MB50 850 15m 2WJABK

RLX B FL	40W	24VDC	MB50	850	15m	2WJABK
Series designation	Power consumption	Supply voltage	Beam option	Light CRI and CCT	Cable length	2: Generation WJA: Codes for cable, bracket, glass BK: Colour

2.4 Dimensions and mass

The dimensions and center of gravity of luminaire housings are as shown in the illustration below. The mass of a bare luminaire housing is between 1.25 and 1.6 kg, depending on the selected beam option. The maximum projected surface area of a module is 0.016 m².

Dimensions of the luminaire housing:

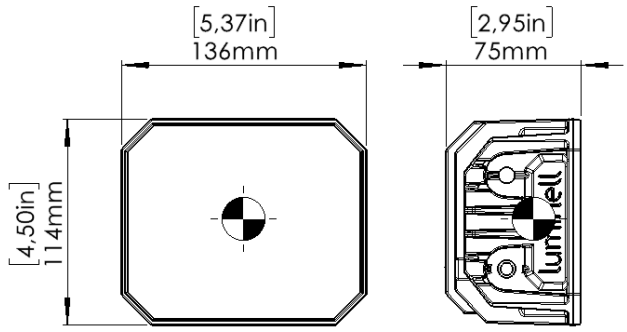

Dimensions of the luminaire with bracket installed in various orientations (side view):

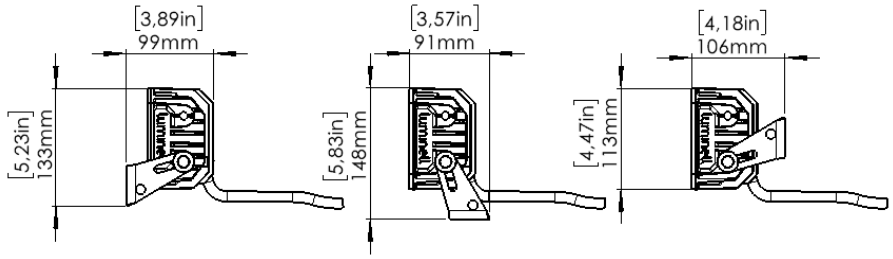

Dimensions of the luminaire with bracket installed in various orientations (front view):

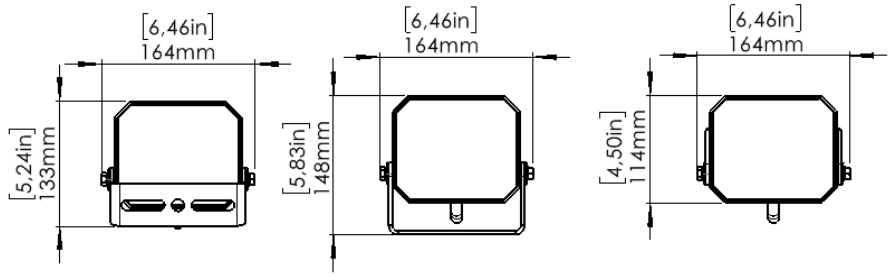

2.5 Product elements

The main elements of the products from the RLX B G2 series are illustrated below.

2.5.1 Elements of RLX B G2 luminaire

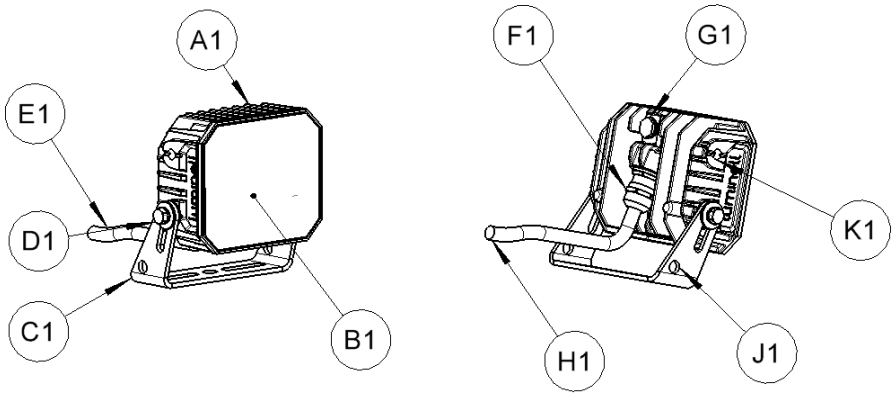

Element	Description
A1	Housing
B1	Front glass, LEDs and optics behind
C1	Bracket
D1	Bracket fixing bolt
E1	Cable
F1	Cable gland (preinstalled)
G1	Membrane vent
H1	End of cable, sealed against moisture ingress for shipping
J1	Hole for drop wire attachment (⌀ 11 mm; 0.44in)
K1	Hole for drop wire attachment and accessory mounting (⌀ 9 mm; 0.35in)

2.6 Technical life span

The luminaires of this series are designed for a lifetime of 100000 hours operation at maximum ambient temperature. After this time 50 % of the LEDs used will still provide over 70 % of their initial lumen output (L70B50). Lower ambient temperatures can lead to longer lifetimes.

2.7 System layout

A system installation will differ depending on what kind of luminaire is used. The floodlights are versatile, and a light simulation is required to have the area illuminated properly. For the walkway XWBA (Extreme Wide Beam Asymmetric) the distances between the luminaries should be according to the illustration and table below to have an even illumination of a walkway.

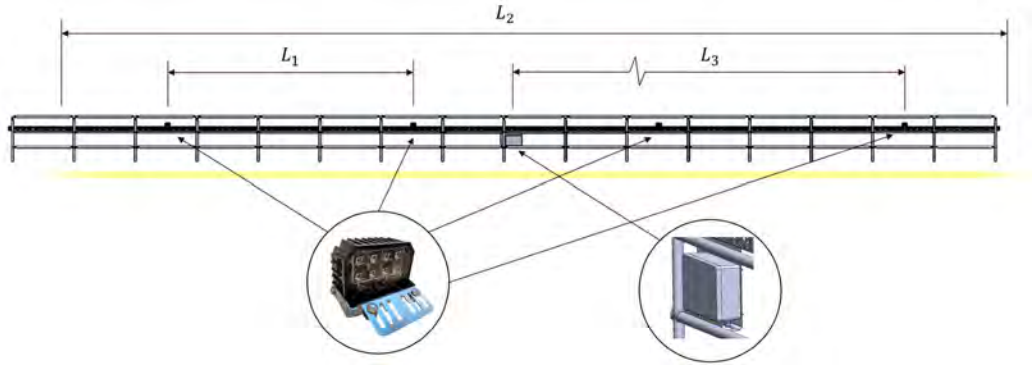

Legend	Description	
L_1	Maximum center-center distance between luminaires	8 m
L_2	Total illuminated length	32 m
L_3	Maximum cable length from Junction Box to luminaire	50 m*

*24 V supply voltage recommended due to voltage drop.

Maximum cable length from Junction Box to luminaire (L_3) is the same for all variants. Min. cable cross section between luminaire and junction box is 1,5mm².

The illustration above shows a schematic layout of a system consisting of one power supply junction box and four equally spaced XWBA luminaires along stretch of walkway railing. For installation instructions on the power supply junction boxes please refer to document 22154296.

2.8 Product Compliance

This product complies to all relevant European Directives. The Declaration of Conformity can be found in the appendix.

3 Safety Instructions

⚠WARNING

Read and understand this manual and its safety instructions before using this product. Failure to do so can result in serious injury or death.

3.1 Potential hazards during installation, testing and use

⚠WARNING

During installation and testing electrical hazards need to be avoided. Only qualified personnel should install the products. During installation the mains power needs to be securely switched off. Testing should only take place when all wires are properly terminated and secured.



ELECTRICAL HAZARD
Do not work on luminaires or power supply junction box while mains power is switched on.

⚠CAUTION

During testing and use the luminaires will emit huge amounts of light that is also focused by different types of lenses. Avoid staring into operating lamps during testing and use.



OPTICAL RADIATION
Do not stare at operating lamp. May be harmful to the eyes.

⚠CAUTION

During installation and testing the installer should be aware of the crushing hazard when handling parts that are rotating against each other during installation (e.g., luminaire housing and bracket).



CRUSH HAZARD
Be aware of moving parts when lifting and mounting the floodlight.

3.2 Potential health consequences

Working on luminaires while mains powers are switched on can lead to severe injuries and even death.

Staring into the lamp while under operation may cause permanent eye damage.

Crushing fingers or hands during installation can lead to minor injuries.

3.3 Mounting products for safe use

3.3.1 Flood beam luminaires (MB30, MB50, WB90)

RLX B floodlight is designed to be used as work lighting and general area lighting for harsh outdoor environments. For best use of the luminaire, care should be taken to mount the luminaire as directly above the area as possible, with no obstructions blocking the light. The RLX B uses high power LED light sources and can cause considerable glare if mounted too close to eye level. This should be avoided for safety reasons, as well as for the comfort of the user.

⚠CAUTION

The flood beam luminaire should be positioned so that prolonged staring into the luminaire at a distance closer than 0.8 m is not expected.

3.3.2 Walkway beam luminaires (WBA, XWBA)

RLX B Walkway is intended for use on pedestrian pathways in harsh outdoor environments. The product is designed specially to exclusively illuminate pathways, walkways and other such areas for pedestrian navigation. The product is to be mounted at a height of no less than 900 mm and no more than 1300 mm above the surface it is intended to illuminate. The emitting surface of the luminaire should always be pointed at a vertical angle of 0 degrees down towards the pathway. This rotation angle must not exceed ± 15 degrees at any time. Due to the extreme asymmetric light distribution and the light intensity of the RLX B Walkway, breach of these mounting guidelines can result in strong glare for the observer and reduced visibility in the working area.

⚠CAUTION

The walkway beam luminaire should be positioned so that prolonged staring into the luminaire at a distance closer than 0.6 m is not expected.

4 Preparation

4.1 Transport, storage and packaging content

4.1.1 Handling

All products need to be handled with care during transport and installation.

4.1.2 Storage

The products should always be stored in a dry place in their original packaging. To retain the product lifetime the storage temperature should be within the range of –40 °C to +80 °C.

4.1.3 Transporting the product

The products should always be transported and stored in their original packaging.

4.1.4 Packaging contents

A luminaire package contains the following items:

- The luminaire itself with it's flying lead cable coiled up as a ring
- A copy of this user manual
- Cardboard packaging material for safe shipping

4.2 How to Install the Product

⚠WARNING

Installation of the product shall only be done by skilled persons. A skilled person is an individual with electrical education and/or training, able to perceive risks and avoid hazards occurring during installation and testing of the products.

⚠CAUTION

Do not install the product covered in thermally insulated material. Otherwise, the performance of the product will be negatively affected.

4.2.1 Conditions for assembling

Do not assemble or adjust while mains power is switched on. Do not assemble under very wet weather conditions. Open cable ends and open junction boxes need to be properly shielded from moisture ingress during installation.

4.2.2 Tools for assembling

A small range of tools is required for the installation of RLX B G2 products:

Tool	Use

13 mm combination spanner	Tightening luminaire brackets
24 mm combination spanner	Tightening Cable gland cap nuts
30 mm combination spanner	Tightening Cable gland cap nuts
PZ2 screwdriver	Tightening junction box lids
blade screwdriver 5.5 x 0.8 mm	Operating terminals
Cable cutter	Cutting pre-installed cables to required length
Wire stripper	Preparing cable ends for termination
End-sleeve crimping tool (optional)	Preparing cable ends for termination
Additional 13 mm combination spanner (optional)	Tightening bolts for glare shield accessory

4.2.3 Unpacking the product

The following unpacking procedure is recommended:

1. Read the label on the cardboard box carefully to understand the type of product in the box.
2. Cut the tape along the seams of the cardboard box cover with a paper knife. Do not penetrate the cardboard box with the knife more than is necessary as this may damage the product inside.
3. Take the product out of the box with both hands. In case of luminaires make sure to hold the cable directly and do not pull it out by dragging it along with the luminaire.
4. Check whether the products type label is consistent with the identifier on the box.
5. Check whether any part is damaged, or any component is missing.

4.2.4 Mounting position

Mounting position and orientation need to be selected with respect to the instructions regarding *Mounting products for safe use* in the *Safety Instructions* section.

The RLX B G2 is designed for outdoor use under offshore conditions on vessels and platforms. It shall not be used as lighting for hazardous areas not specified by Glamox.

The product can be installed indoors at rated ambient temperatures.

4.2.5 Mechanical mounting

4.2.5.1 Luminaire

Each luminaire features a preinstalled bracket for mounting on the structure of the vessel or platform they will be used. To reduce the environmental impact of shipping the brackets are folded in to fit smaller boxes. The RLX B G2 luminaires may be mounted in any direction, however it is recommended to point the cable gland downwards.

Two mounting procedures can be recommended depending on the mounting situation. Procedure I is the recommended procedure and is intended for standard mounting situations. Procedure II considers the potential need to change the bracket orientation for mounting (e.g. for overhead mounting) as well as improved comfort for the installer in hard-to-reach mounting positions.

Procedure I:

1. Turn loose bolts holding the bracket to the luminaire
2. Unfold the bracket from the luminaire
3. Fix the bracket under an angle that allows for mounting the bracket to the ship/platform structure and will allow adjusting the orientation of the luminaire with respect to desired illumination pattern.
4. Mount the bracket to the ship/platform structure using at least two M8 bolts. Use washers under fixing nuts for better load distribution. Tighten bolts with respect to the structural grade of the screws used for mounting.
5. Turn loose the bolts holding the bracket to the luminaire and adjust the orientation of the luminaire with respect to desired illumination pattern.
6. Fasten the bolts holding the bracket to the luminaire (torque: 20 Nm)

Procedure II:

1. Unscrew bolts holding the bracket. Detach the bracket from the luminaire. Be careful not to drop bolts or bracket from elevated positions. It is recommended to detach the parts on a workbench near floor level.
2. Position the bracket on the ship/platform structure so that it will allow adjusting the orientation of the luminaire with respect to desired illumination pattern
3. Mount the bracket to the ship/platform structure using at least two M8 bolts. Use washers under fixing nuts for better load distribution. Tighten bolts with respect to the structural grade of the screws used for mounting.
4. Reattach the luminaire to its bracket using the bolts and washers as shown in the illustration below and adjust the orientation of the luminaire with respect to desired illumination pattern. Fit the spacing washer (element D1.3) between housing and bracket on each side.
5. Fasten the bolts holding the bracket to the luminaire (torque: 20 Nm)

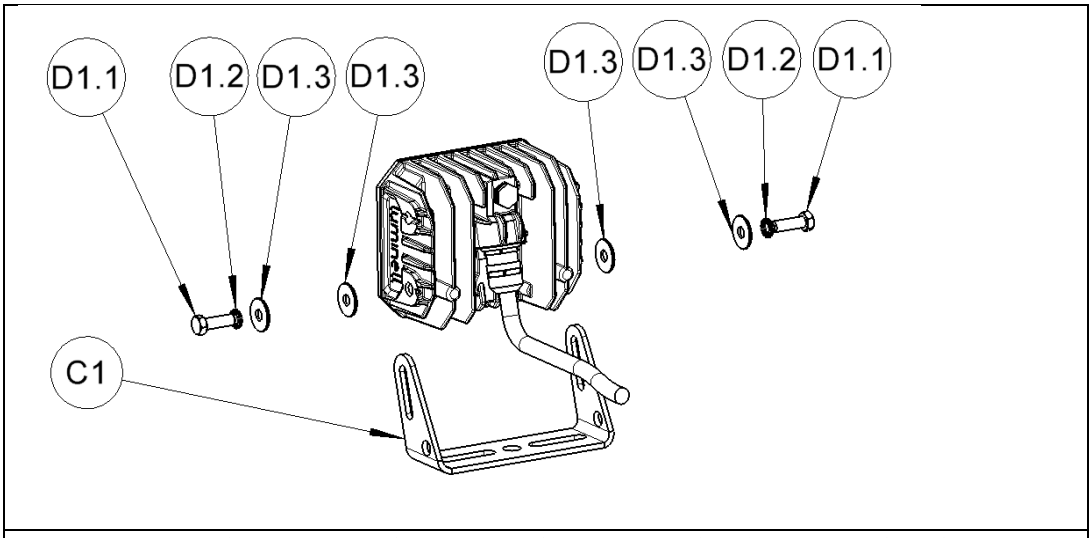

Bracket mounting (exploded view); Fixing bolt (element D1.1), safety washer (D1.2), washer (D1.3) between safety washer and bracket, washer (D1.3) between bracket and housing, bracket (C1)

4.2.6 Electrical interconnection

RLX B G2 luminaires should be operated with constant voltage power supplies only. Every RLX B G2 power supply junction box features a constant voltage power supply. The use of constant current power supplies is not recommended.

⚠CAUTION

RLX B G2 power supply junction boxes need to be only operated with AC current at specified nominal frequencies. Operating beyond specified limits may malfunction or damage the power supply and luminaires.

4.2.6.1 Luminaire

⚠WARNING

To reduce the risk of strangulation the flexible wiring connected to the luminaires shall be effectively fixed to the wall if the wiring is within arm's reach.

⚠CAUTION

Terminal blocks are not included for individual luminaires. Installation must be performed by qualified person. Only terminals that suit the conductor type and cross-section specified for the luminaire must be used.
The RLX B G2 luminaires are shipped with flying leads attached.

	
2 core variants	3 core variants

The cable has the following properties:

Cable property	Value
Type	H07RN-F
Sheath material	Rubber, halogen free
Temperature range	-40 °C to +90 °C
Conductor cross-section	1,5 mm²
Number of cores	2 or 3 (depending on product variant)
Outer diameter	2 core variants: 8.5 to 11 mm 3 core variants: 9.2 to 11.9 mm
Minimum bending radius	Moved: 6 x Outer diameter Fixed installation: 4 x Outer diameter
Colour coding of cores	2 core variants: brown (+ 24 V), blue (- 24 V) 3 core variants: brown (+ 24 V), blue (- 24 V), green/yellow (earth)
Shipping condition	Coiled with cable tie, end sealed with cap against moisture ingress

⚠CAUTION

Please note the deviation from the red(+)/black(-) wire convention for 24 V systems. A cable with brown(+)/blue(-) core colouring is used instead.

4.2.6.2 System wiring

For instructions on wiring of systems of luminaires and a power supply junction box please refer to document 22154296.

4.2.7 Installation of accessories

4.2.7.1 Glare shield for RLX B G2 luminaires

The mains power needs to be switched off securely when performing the glare shield installation on otherwise completed installations.

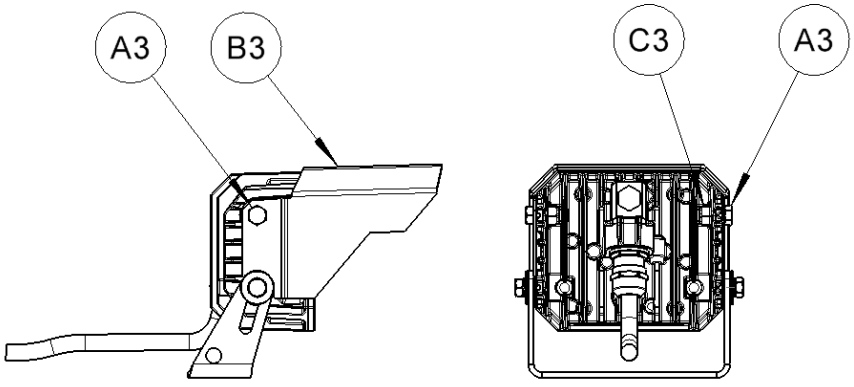

To install the glare shield (B3) push it over the side of the luminaire from the top. Be careful not to scrap of paint from the luminaire housing. Use the provided M8 bolt (A3) and M8 nut

(C3) to fix it into place. Tighten the bolt be using another 13 mm combination spanners to hold the nut in place (torque: 30 Nm).

5 Operation

5.1 How to Use the Product

5.1.1 Checks before using the product

Before product is used, checks should be done to verify the integrity of the product for safe operation.

The following safety checks are recommended:

1. Check if environmental conditions are within the specified range.
2. Make sure the luminaires and power supply junction boxes do not have any broken mechanical parts, including front glass, housings, bolts or brackets.
3. Inspect cable and cable glands to make sure there is no breach of insulation or exposed wire.

5.1.2 Using the product

If all safety checks have shown no deviations, power up the system and let it shine bright.

5.2 Actions for emergency and exceptional situations

If electrical malfunction occurs in a luminaire or power supply junction box, turn off mains power supply immediately.

If a product is severely damaged during operation, turn off mains power supply immediately.

6 Maintenance

⚠WARNING

The RLX B G2 products shall only be maintained by a qualified and trained person. The luminaires should only be opened or dismantled by Glamox personnel. Warranty will be voided if the product is opened in any way.

The RLX B G2 products require only little maintenance. The luminaire housings are sealed for life. Depending on the installation location the luminaires should be cleaned at least once a year. More frequent cleaning might be necessary if birds choose the luminaire as a spot for nest building. Too infrequent cleaning can reduce the lifetime of the product.

6.1 Cleaning the product

The following procedure is recommended for cleaning luminaires:

1. Turn off mains power.
2. If feasible, remove any debris from the luminaire with a soft broom or soft brush.
3. Clean the luminaire with water. Do not use solvents.
4. If feasible, the front glass (element B1) can be polished and dried using a soft cloth.

A water hose may be used. The use of power washers is not recommended. Do not aim water jets directly at the membrane vent (element G1).

6.2 Testing the product

⚠WARNING

Only completely installed products shall be tested for their functionality. Open live wires or improperly fixed mechanical parts of incomplete installations can lead to serious injuries or death.

To perform a test:

1. Execute a safety check as described in the *Operation* section
2. Turn on power
3. Inspect and ensure light is illuminating as intended
4. Turn off power to end test

7 Repair and replacement of parts

⚠CAUTION

The external flexible cable of this luminaire cannot be replaced; if the cord is damaged, the luminaire shall be replaced.

NOTICE

The light source of this luminaire is not replaceable; when the light source reaches its end of life the whole luminaire shall be replaced.

7.1 Repair

The luminaire housings are sealed for life, therefore repair of luminaires on site is not feasible.
Repair operations on luminaire housings need to be evaluated with Glamox from case to case.
Please contact Glamox service for evaluation.

7.2 Replacement of parts

For a list of spare parts and accessories please see Appendix I.

⚠WARNING

Make sure to suspend the luminaire properly while it is detached from the bracket. Otherwise, the hanging luminaire itself or its power cable could take damage.

7.2.1 Replacing the bracket of a luminaire

The mains power needs to be switched off securely when performing the bracket replacement.

It is recommended to make use Procedure II from the *Mechanical Mounting* section of this document to replace the bracket of a luminaire. Once luminaire and bracket are detached, the bracket can be removed from the vessels/platforms structure and replaced with a new part. Execute the remaining steps of Procedure II.

7.2.2 Replacing the glare shield of a luminaire

The mains power needs to be switched off securely when performing the glare shield replacement.

It is recommended to follow the procedure for glare shields described in section *Installation of accessories.* The new glare shield replaces the old glare shield.

8 Disassembly and disposal

8.1 How to disassemble the product

The mains power needs to be switched off securely when performing the disassembly of a RLX B G2 luminaire or system of luminaires and power supply junction boxes.

8.1.1 Disassembly for reinstallation

⚠WARNING

The mains power needs to be disconnected permanently when performing disassembly.

⚠CAUTION

Do not loosen the cable gland of the luminaire (element F1). The luminaire could take permanent damage.

Un-terminate the wires of the luminaire cable and loosen strain relief elements used in the terminal box or cabinet. The cable can now be cautiously dragged out coiled up next to the luminaire. Seal the cable end against moisture ingress.

Unbolt the luminaire bracket from the vessels/platforms structure. The product is now ready for reinstallation.

8.1.2 Disassembly for disposal

⚠WARNING

The mains power needs to be disconnected permanently when performing disassembly.

All wires may be cut close to the cable glands of the products. Unbolt the luminaire brackets from the vessels/platforms structure.

8.2 How to dispose the product



The luminaires of the RLX B G2 series are considered electronic components.

8.2.1 Disposal of electronic components



The symbol on the product, the accessories or packaging indicates that this device must not be treated as unsorted municipal waste but must be collected separately! Dispose of the device via a collection point for the recycling of waste electrical and electronic equipment if you live within the EU and in other European countries that operate separate collection systems for waste electrical and electronic equipment. By disposing of the device in the proper manner, you help to avoid possible hazards for the environment and public health that could otherwise be caused by improper treatment of waste equipment. The recycling of materials contributes to the conservation of natural

resources. Therefore, do not dispose of your old electrical and electronic equipment with the unsorted municipal waste.

To dispose of electronic components please make use of the local collection systems for waste electrical and electronic equipment.

8.2.2 Disposal of packaging waste

The packaging is made of environmentally friendly materials, which may be disposed through your local recycling facilities. By disposing of the packaging and packaging waste in the proper manner, you help to avoid possible hazards for the environment and public health. The symbol on the packaging indicates that the packaging is made of PAP.

To dispose of packaging waste please make use of the local recycling facilities.

8.2.3 Dismantling of product

Dismantling the product for recycling is outside the scope of this document. Dismantling instructions for this product and other Glamox product can be downloaded here:

https://www.glamox.com/global-marine/glamox-policies/dismantling-instructions/

9 Appendix I – supplied accessories and spare parts

For ordering accessories, consumables and/or spare parts:

Please visit https://www.glamox.com/global-marine/contact/ for contact information.
Phone: +47 71 25 04 00

9.1 Supplied accessories

Image	Name	Article Number
	B Cap Set	LN1002645

9.2 Spare/replacement parts

Image	Name	Article Number
	B Marine bracket set	E-23-005792
	B Cable tray bracket	E-23-005341

10 Appendix II - CE Declaration of Conformity

luminell

CE

EU Declaration of Conformity (DoC)

Document No.: 22154412
Rev.: 2

Manufacturer	**Glamox AS**
Address	Borgundfjordvegen 116, 6017 Ålesund, Norway
Product type	**LED Luminaire for general lighting**
Product description	**Luminell RLX B G2 Floodlight**

Valid for products manufactured from signature date until new revision released

We declare under sole responsibility that the above listed product series conform with the directives/standards listed

EU Directive	**2014/30/EU (EMC-Directive)**
Harmonized European standards	**EN 55015:2019 + A11:2020** EMC emission requirements for electrical lighting and similar equipment **EN 61547:2009** Equipment for general lighting purposes – EMC immunity requirements **EN 61000-3-2:2019** Limits for harmonic currents
EU Directive	**2014/35/EU (Low Voltage Directive)**
Harmonized European standards	**EN 60598-2-1:1989** Luminaires - Particular requirements – Fixed general-purpose luminaires **EN 60598-2-5:2015** Luminaires - Particular requirements – Floodlights **EN IEN IEC 62031:2020 + A11 2021** LED modules for general lighting - Safety specifications **EN 62471:2008** Photobiological safety of lamps and lamp systems **EN 61347-2-13:2016** Lamp control gear - Particular requirements for d.c. or a.c. supplied electronic control gear for LED modules
Additional standards	**IEC 60092-306 2022** Electrical installations in ships-Luminaires
EU Directive	**2011/65/EU (RoHS-Directive) + (EU) 2015/863**
EU Directive	**2009/125/EC Eco Design, Regulation (EU) 2019/2020 and Regulation (EU) 2019/2015**

Signed for and on behalf of: **Glamox AS**

Email: info@glamox.com
Web: www.glamox.com

Place, Date: Ålesund, 08 December 2023

David Fink

David Fink
Technology Director MOW

Note:
This declaration of conformity loses the validity, if the product
- is modified, completed or changed in another way
- is operated with not authorized spare parts or accessories
- is installed and operated in an improperly manner

without express consent of Glamox AS

22154412.docx G2

Glamox

11 Glossary

Explain the meaning of all terms used in this document.

Term	Meaning
MB	Medium Beam
WB	Wide Beam
WBA	Wide Beam Asymmetric
XWBA	Extra Wide Beam Asymmetric

12 Related documentation

#	Document Title	Location	Author
1	Dismantling instructions	https://www.glamox.com/global-marine/glamox-policies/dismantling-instructions/	Glamox