75 LED PORT RED 112.5° 115-230VAC

The Series 75 LED Navigation lights are applicable for all vessels ≥ 20 m in length. The LED Navigation lights fulfil all requirements of International Regulations for Preventing Collisions at Sea 1972 (COLREG) that are published by the International Maritime Organization (IMO) and local rules. Series 75 is available in Single version (Series 75), Double version (Series 75D), Single Arctic version (Series 75 Arctic) and Double Arctic version (Series 75D Arctic). Arctic versions are intended for use in low temperature areas, and includes a heating foil, on the inside of the glass lens, for de-icing. The Series 75 is based on the latest innovative LED and driver technology. Compared with conventional navigational lights and first generation LED navigational lights, the Series 75 set new standards in terms of lifetime, efficiency and reliability. The main and the back-up systems are compactly integrated in one housing. Series 75 navigation lights are available in black housing color.



Item Number	3684205000
GTIN	4036538645174
Stock status	B

Technical specifications

Electrical Data	
Mains current	0.05
Minimum Voltage -10% (VAC)	103
Maximum voltage +10% (VAC)	253
Minimum frequency -5% (Hz)	50
Maximum frequency +5% (Hz)	60
Total consumption (W)	4

Optic	
Output angle (°)	112.5
Visibility (nm)	3
Material of diffuser	Borosilicate glass
Diffuser material design	Clear

Certificates	
Certification	DNV
Marine Approved	true

Technical Data	
Minimum ambient temperature (°C)	-25
Maximum ambient temperature (°C)	55
IP classification	X6/X7
Lantern type	Single

Light Technical Data	
Light source	LED
Number of lamps	1
Power consumption light source (W)	4
Lamp type	RED
Light source included	true

Lifetime	
L70 Median useful life LED Ta45 (hr)	100 000

Housing	
Main body material	Polycarbonate
Surface treatment	Reinforced
Body colour	BL - Black
Main body colour name	Black

Dimensions	
Length (mm)	248
Width (mm)	176
Height (mm)	222
Net weight (kg)	2.3552

Cable Inlet	
Cable gland	M25-Polyamide
Number of cable glands	1
Number of blind plugs	1
Max cable diameter (mm)	17
Min cable diameter (mm)	10

Logistic Data	
Item gross weight (kg)	2.56

Navigation	
Vessel length	> 50 meters;20 - 50 meters

The Company reserves the right to change any product specifications without prior notification.

Images

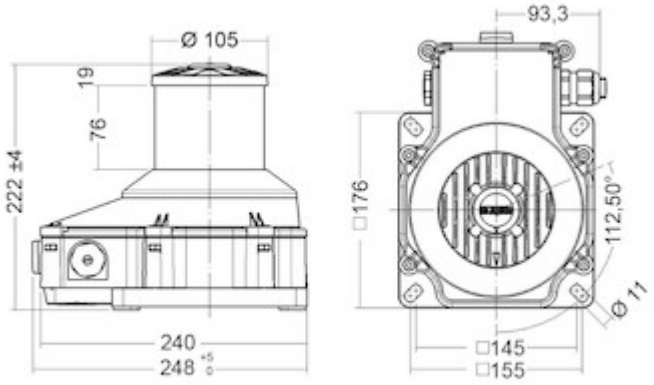

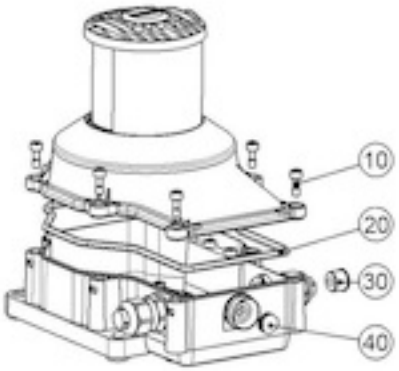

Spare Parts		
Pos.		Spare part no.
10	Screws stainless steel;6 pcs.	E-2366502100
20	Gasket for housing,silicone;1 pc.	E-2367501100
30	Reduction insert for connection cable;2 pcs.	E-9060085000
40	Pressure equalisation with bush M20, polyamide;1 pc.	E-9060036300