70 STERN WHITE 135 W/O BULB

The Series 70 Navigation lights are applicable for all vessels ≥ 20 m in length. The Navigation lights fulfil all requirements of International Regulations for Preventing Collisions at Sea 1972 (COLREG) are published by the International Maritime Organization (IMO) and local rules. Please note, that bulb has to be ordered separately.



Item Number	3072700000
GTIN	6947764636424
Stock status	A

Technical specifications

Electrical Data	
Minimum Voltage -10% (VAC)	110
Maximum voltage +10% (VAC)	230
Minimum frequency -5% (Hz)	50
Maximum frequency +5% (Hz)	60
Main Feed DC (V) Min	24
Main Feed DC (V) Max	24

Optic	
Output angle (°)	135
Visibility (nm)	3
Material of diffuser	Acrylic

Certificates	
Marine Approved	true

Technical Data	
Minimum ambient temperature (°C)	-45
Maximum ambient temperature (°C)	45
IP classification	56

Light Technical Data	
Number of lamps	1
Lamp base	P28s
Light source included	false

Housing	
Main body material	Polycarbonate
Surface treatment	Reinforced
Body colour	BL - Black
Main body colour name	Black
Detail material	Fibreglass plastic

Dimensions	
Length (mm)	220
Width (mm)	220
Height (mm)	320
Net weight (kg)	2.502032

Cable Inlet	
Cable gland	M24
Number of cable glands	1

Logistic Data	
Item gross weight (kg)	2.7196

Navigation	
Vessel length	> 50 meters;20 - 50 meters

Images

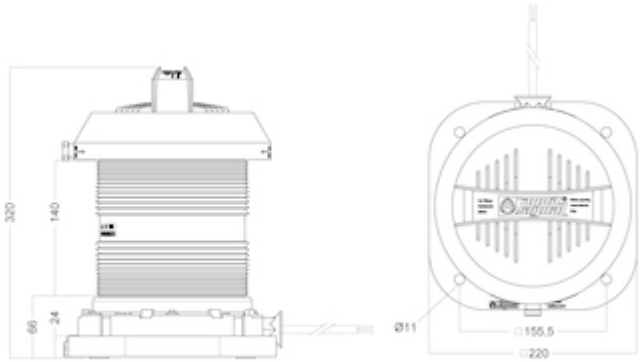

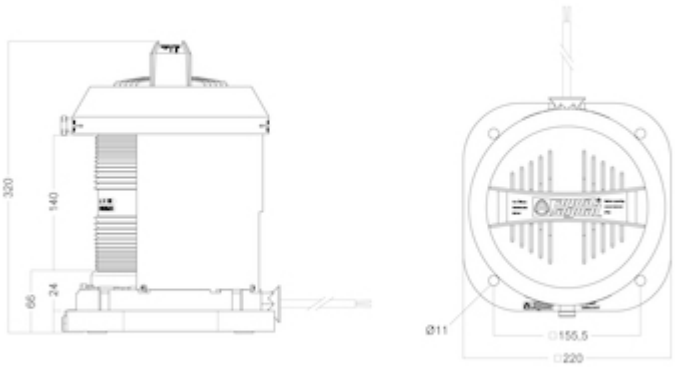

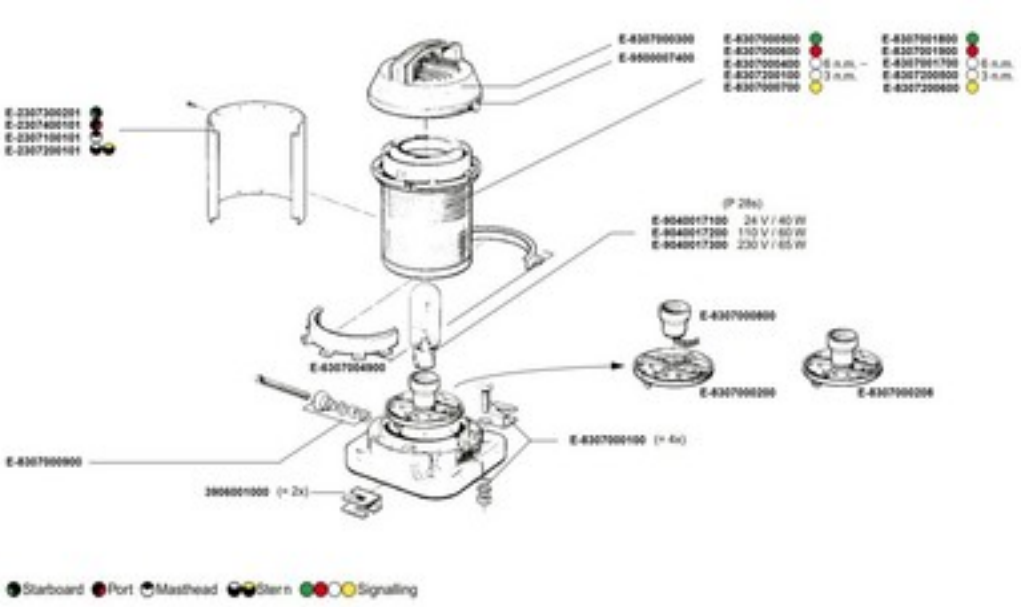
E-6307000300
E-9500007400
E-6307000500
E-6307000600
E-6307000400
E-6307200100
E-6307000700
E-6307001800
E-6307001900
E-6307001700
E-6307200500
E-6307200600
E-2307300201
E-2307400101
E-2307100101
E-2307300101
(P 28s)
E-9040017100 24 V / 40 W
E-9040017200 110 V / 60 W
E-9040017300 230 V / 65 W
E-6307004900
E-6307000800
E-6307000200
E-6307000208
E-6307000100 (* 4x)
E-6307000900
3906001000 (* 2x)
Starboard
Port
Masthead
Stern
Signalling