Mounting Instructions for Navigation Lights



aqua signal 70

aqua signal 70D

aqua signal 70M

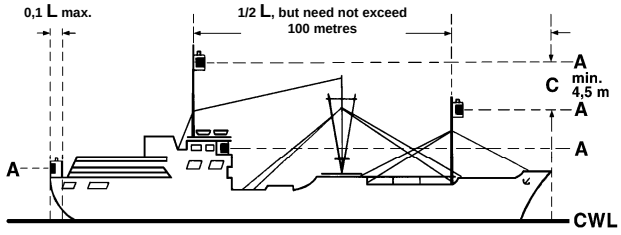

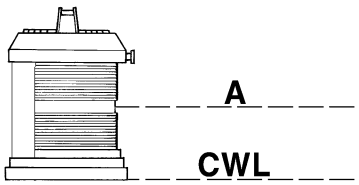

aqua signal 70 Masthead light

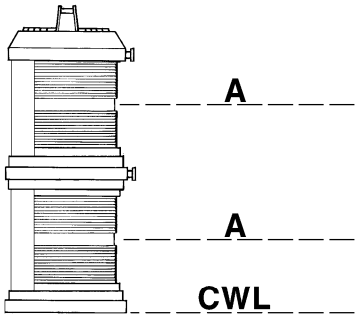

aqua signal 70D / 70M Masthead light

A = horizontal plane
CWL = construction waterline
L = Ship`s length

❶

Mounting Instructions

for Navigation Lights
Type AQUA SIGNAL 70 (single lens)
Type AQUA SIGNAL 70 D (double lens)
Type AQUA SIGNAL 70 M (double lens MODULAR)

These navigation lights comply with the national and international regulations regarding minimum range of visibility, luminous intensity of horizontal and vertical sectors, and colour specifications for vessels of 20 metres and more in length (Regulations for Preventing Collisions at Sea). Lights marked ¥ D in addition to the DHI resp. BSH marking may be utilized on European inland waterways.
However, the correct functioning of the lanterns in accordance with the rules can only be ensured when some important points regarding mounting and maintenance have been considered. It is therefore essential to study the following pages attentively.

Important:
The upper lens compartment of double lens lights is always to be used within the main lighting system whilst the lower one belongs to the stand-by system.

Regulations
For all ships the rules set forth in Annex 1 to the International Regulations for Preventing Collisions at Sea - Positioning and Technical Details of Lights and Signalling Shapes - must be adhered to. The technical data regarding horizontal and vertical positioning and spacing of the navigation and signalling lights laid down in these mounting instructions do apply to all ships irrespective of their flag.

Mounting of navigation lights in general* ❶
The lights must be positioned in and above keel line resp. parallel with it. Their horizontal plane (**A**) must be parallel with the construction water line (**CWL**).
Their light must not be obstructed by parts of the vessel or objects or persons aboard within a vertical sector of ± 10° and a horizontal sector corresponding to the one of the lights. Their relative positions to the vessel are not to be changed while in operation.
The vertical distance (**C**) must be minimum 4,5 metres respectively sufficient to allow recognizing the after masthead light over and separate from the forward light under all conditions of trim at a distance of 1000 metres.
*** Deviating from the anti collision regulations the forward masthead light needs be fitted only 5 metres above the hull and the after masthead light just 3 metres higher if the vessel is designed and registered for operation on European inland waterways until the border of high seas navigation.**

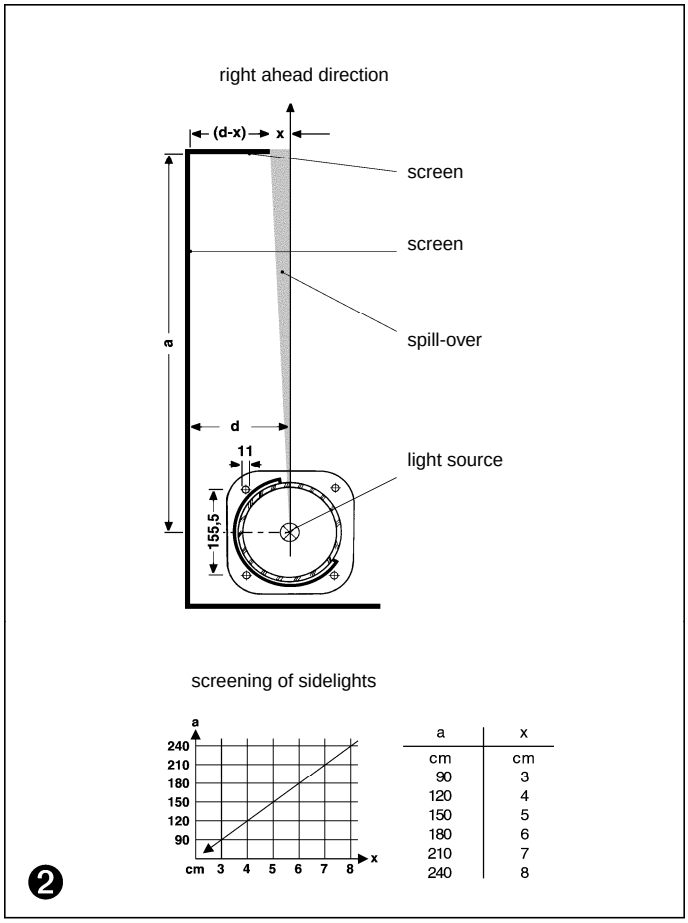

❷

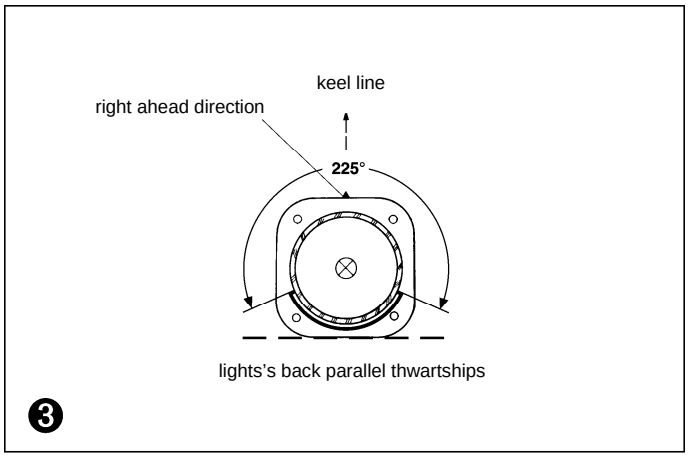

❸

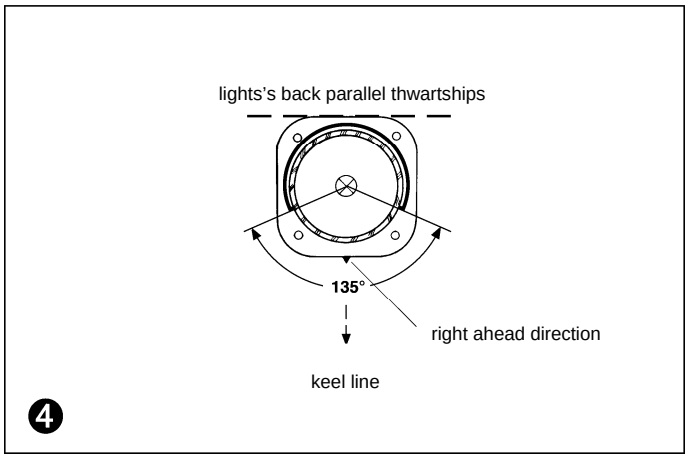

❹

Mounting Instructions

The navigation and signalling lights AQUA SIGNAL 70, 70 D, and 70 M are in conformance with the IMO regulations 1972 and approved by the respective national authorities. For approval no. and manufacturer's type designation look at the name plate.

Sidelight AQUA SIGNAL 70 / 70 D / 70 M
Horizontal sector 112,5°
Range of visibility 3 nautical miles
The light must be fitted with its horizontal plane (**A**) parallel with the **CWL** ❶.
The right ahead direction mark of the light must be aligned parallel with the keel line and conform with the ship's marking. For precise measures look at ❷. Special attention is to be paid to the right ahead direction. The measurement „**X**" ❷ must precisely be adhered to since otherwise the light intensity in the right ahead direction may be reduced.

Masthead light AQUA SIGNAL 70 / 70 D / 70 M
Horizontal sector 225°
Range of visibility 6 nautical miles
The light must be fitted with its horizontal plane (**A**) parallel with the **CWL** ❶.
The right ahead direction mark of the light ❸ must be in and above the keel line and in conformity with the ship's marking. For precise mounting look at ❸.

Stern light AQUA SIGNAL 70 / 70 D / 70 M
Horizontal sector 135°
Range of visibility 3 nautical miles
The light must be fitted with its horizontal plane (**A**) parallel with the **CWL** ❶.
The right ahead direction mark of the light ❹ must be in and above the keel line and in conformity with the ship's marking. For precise mounting look at ❹.
Stern light white: The light is equipped with a colourwise neutral grey filter to prevent undue glare.

aqua signal 70 / 70D / 70M

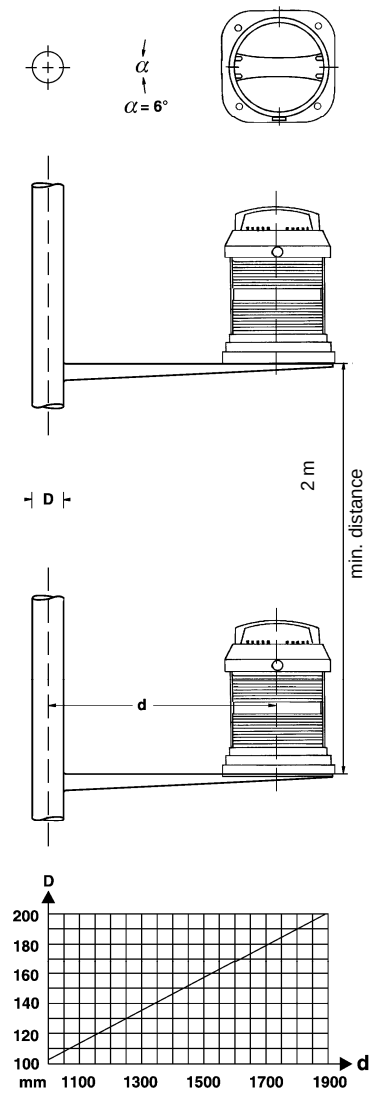

Graph to determine the min. distance d to keep Alpha 6°

❺

Signalling lights AQUA SIGNAL 70 / 70 D / 70 M
Horizontal sector 360°
Range of visibility 3 nautical miles
Signalling light white: The light is equipped with a colourwise neutral grey filter to prevent outshining of coloured signalling lights.
Signalling lights may be positioned solidly mounted or variably.
In case of solid mounting attention is to be paid that their sector will not partly be obscured by the vessel to a greater extent than negligible. At any event the sector of obscuration must not exceed 6° ❺.
The graph ❺ reveals the distance „**d**“ mast centre to light centre.
In case two signalling lights white are fitted as anchor lights they must be positioned in such a way that one of them can be seen from all over the horizon.
In case 2 or 3 signalling lights shall be fitted in a vertical line the distance between them must at least be 2 metres ❺.

Signalling lights for special application
e.g. manoeuvre light
Horizontal sector 360°
Range of viisibility 5 nautical miles
e.g. morse light
Horizontal sector 360°
Range of visibility 3 nautical miles
These lights must only be operated by means of approved morse keys.
These lights must be solidly mounted. Their sector must not partly be obscured by the vessel to a greater extent than negligible. At any event the sector of obscuration must not exceed 6° ❺.

aqua signal 70 / 70D / 70M

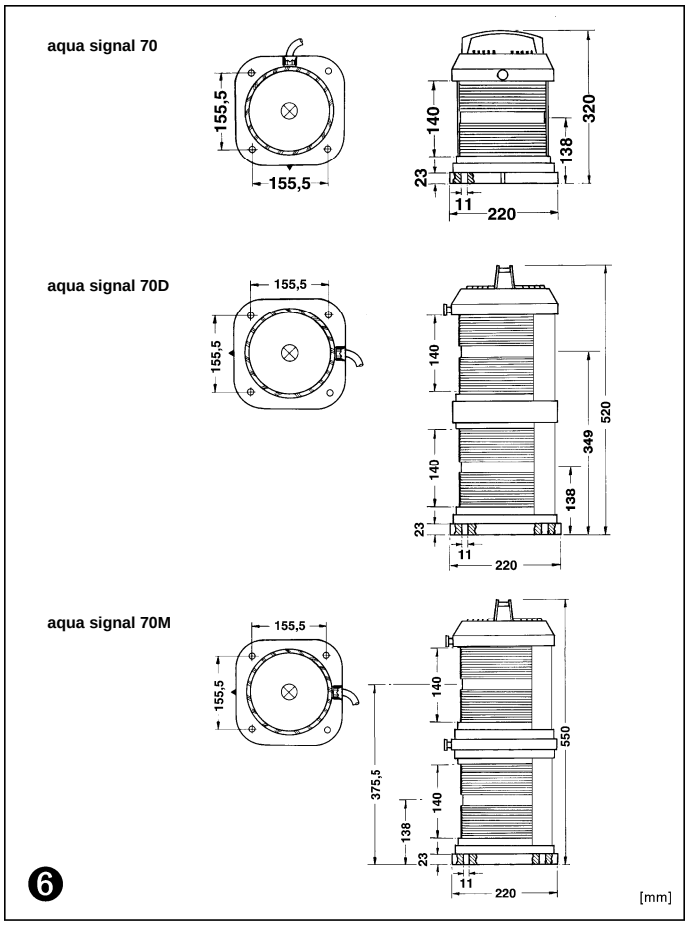

❻

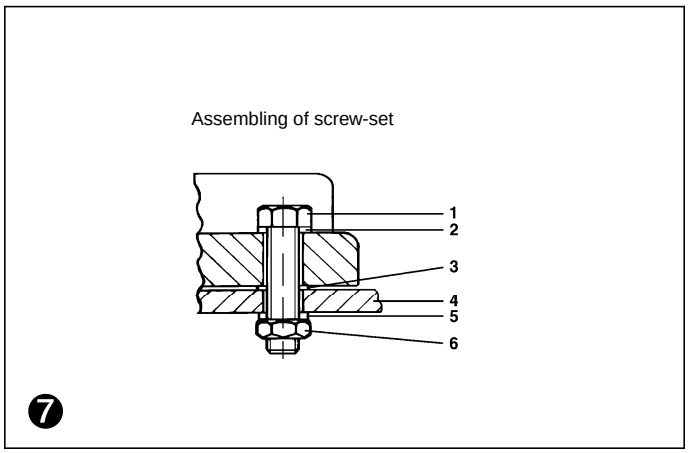

❼

Connection cable
The navigation and signalling lights AQUA SIGNAL 70 as standard are equipped with one cable of 1,5 metres in length. Those lights of types 70 D and 70 M have two of these cables. In case these cables need to be renewed with types AQUA SIGNAL 70 and 70 M unscrew the lampholder assembly (3 screws) and pull it out upwards. The terminal is fitted to its reverse.
With type AQUA SIGNAL 70 D you have first to remove the lampholder assembly from the upper lens compartment to obtain free access to the upper terminal. To exchange the lower cable proceed as advised above.

Incandescent bulbs and how to change them
There are 3 different bulbs available for 24, 110, and 230 V. Their lamp base is P28s making sure that the bulb is correctly positioned.
These lights are to be operated exclusively with special approved bulbs. These special bulbs from AQUA SIGNAL are labeled as follows:
24V/ 40W ZP D 1103, 110V/ 60W ZP D1103,
230V/ 65W ZP D 1103
To change the bulb disconnect the plug, loosen the locker screw, turn the light's cover to the left and lift it off. Now the bulb may easily be changed from top.
To change the lower bulb of an AQUA SIGNAL 70 D you additionally have to remove the lampholder assembly from the upper lens compartment first.
To change the lower bulb of an AQUA SIGNAL 70 M please disconnect the plug, loosen the lower locker screw, turn the complete upper light left, lift it off and make it hang down sidewards. Then change the bulb, put the upper light in place again and lock it by turning it right, and tighten the locking screw.

Maintenance
All components of the lights are made of seawater resistant materials and need no particular maintenance except occasional cleaning.
For cleaning just take fresh water and a soft cloth or sponge, by no means solvents or abrasive substances like e.g. steelwool or scouring sand.
Important
for optical reasons the navigation light's housing must not be painted. The lenses in particular but also other plastic components may not be touched with paint.

Assembling of screw-set ❼
1. Stainless steel screw M 10 x 50
2. Stainless steel washer Ø 10.5
3. Plastic washer Ø 10.5
4. Mounting console min. 8 mm or with appropriate support
5. Lock washer Ø 10,5
6. Stainless steel nut M 10 max. torque 50 Nm (= 5 Kpm)

Spare Parts / *Extras

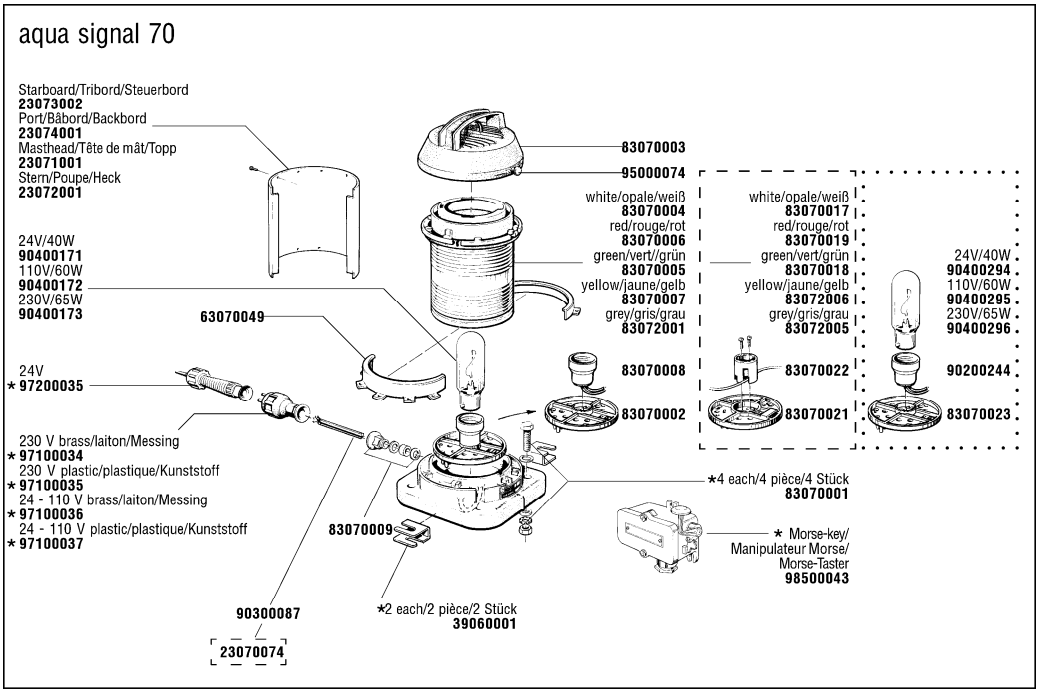

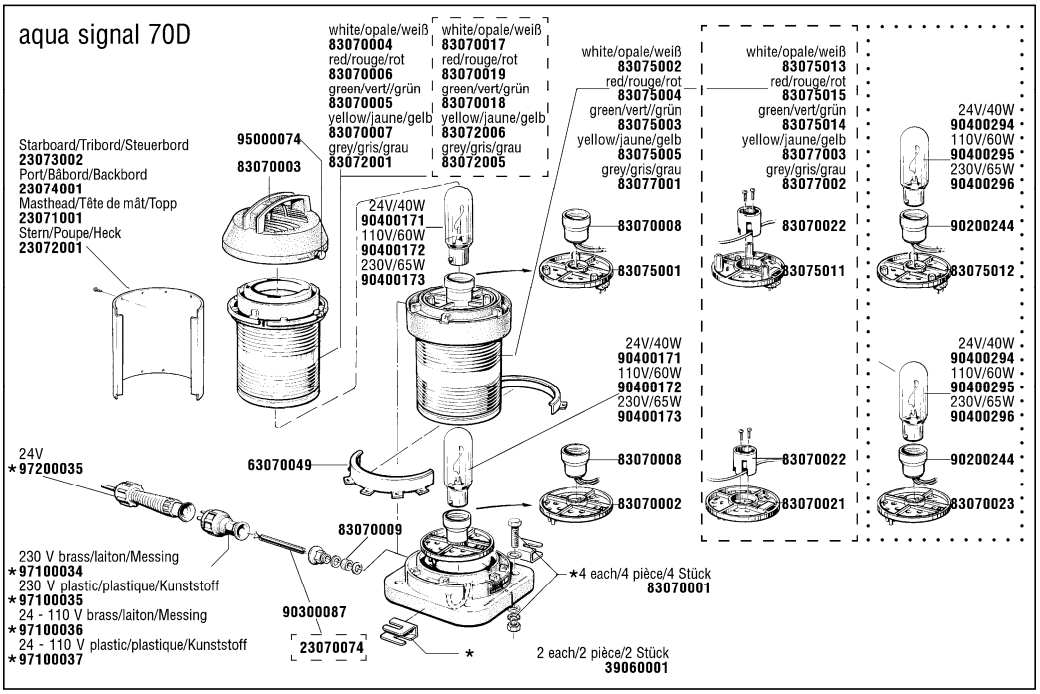

Legend:
Légende:
Legende:

only for USCG and CCS
uniquement USCG et CCS
nur für USCG und CCS

only for RINA
uniquement RINA
nur für RINA

* Extras not included
Accessoires non partie de livraison
Zubehör gehört nicht zum Lieferumfang

Spare Parts / *Extras

aqua signal 70M

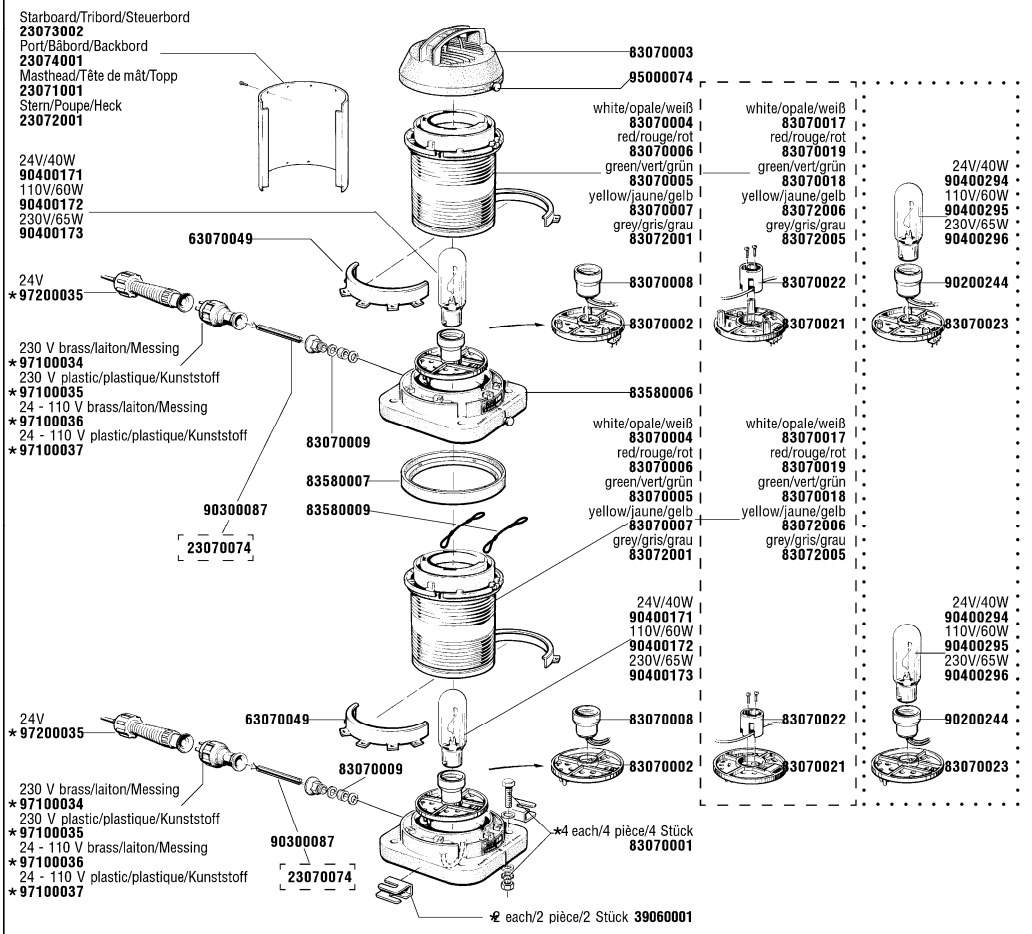

Legend:
Légende:
Legende:

only for USCG and CCS
uniquement USCG et CCS
nur für USCG und CCS

only for RINA
uniquement RINA
nur für RINA

* Extras not included
Accessoires non partie de livraison
Zubehör gehört nicht zum Lieferumfang

aqua signal reserves the right to modify their products without prior notice to not impede progress in technology or design.



ATTENTION
Bulbs for Navigation Lights
The bulbs used in Navigation Lights are part of the approval/certification.
Bulbs which are non-approved null-invoid your insurance cover as your lights will not be in line with the regulations/certification.
We recommend to use approved material only since this is in the interest of your safety.

9420022100_08_GB

aqua signal Teterow GmbH & Co. KG
P.O.Box 45 01 61
D-28295 Bremen, Germany
Phone:+49 421 48 93 - 0
Fax: +49 421 48 93 210/- 310
e-mail: info@aquasignal.de
Internet: http://www.aquasignal.de