ES-SYSTEM

COBRA-R70 IP54 WH 400 E1/ST CR

E1 / ST means that this item has a built-in emergency light for minimum 1 hour duration. It tests itself according to European emergency light standards. Indicator LEDs on the product communicate the test results.

Item No.	CBR105375
GTIN	5903531053758
Stock status code	M



Technical specifications

Mounting	
Product Mounting	Ceiling recessed

General	
Product shape	Round

Electrical Data	
Main Feed AC (V) Min	220
Main Feed AC (V) Max	240
Main Feed Frequency Min	50
Main Feed Frequency Max	60
Total Consumption (W)	8.3
IEC Protection Class	II

Optic	
Optic description	Wide beam 2 direction distribution for corridor
Optic Name	CR - Escape route

Certificates	
Certification	CNBOP;HACCP

Technical Data	
Minimum TA (°C)	0
Maximum TA (°C)	50
IK classification	08
IP classification	54 from underneath \ 20 from above

Light Technical Data	
Light source	LED
Lumen Out (lm)	430
Lumen Per Watt (lm/W)	143
Lamp colour temp (K)	5700
Colour Rendering Index	>70
Light Distribution Up %	0
Light Distribution Down %	100
MacAdam step	3
Light Source Included	true
PstLM: Flicker (<)	0.0816
SVM: Stroboscopic Visibility Measure (<)	0.032

Driver / Ballast	
Type of LED Driver	HF: Non dimmable

Lifetime	
LED Lifetime L70B50 Ta25 (h)	100 000
LED Lifetime L80B50 Ta25 (h)	100 000
LED Lifetime L90B50 Ta25 (h)	100 000

Emergency	
Emergency Type	ST = Self test
Duration (hrs)	1
Charging power consumption (Emg) (W)	1.5
Lumen Out In Emergency (lm)	410
Percentage Light Out In Emergency	100
Battery Type	NiMh
Battery Form	Stick
Battery mAh	2200
Battery Voltage (V)	4.8
Battery Sparepart No	SP-MY-413-M22H14Z
Battery Termination	NS39

Housing	
Body Material	Aluminium
Body Colour	WH - White
Main Body Colour Name	White

Dimensions	
Height (mm)	25
Diameter (mm)	80
Item Net Weight (kg)	0.4324

Logistic Data	
Item Gross Weight (kg)	0.47

Illustrations

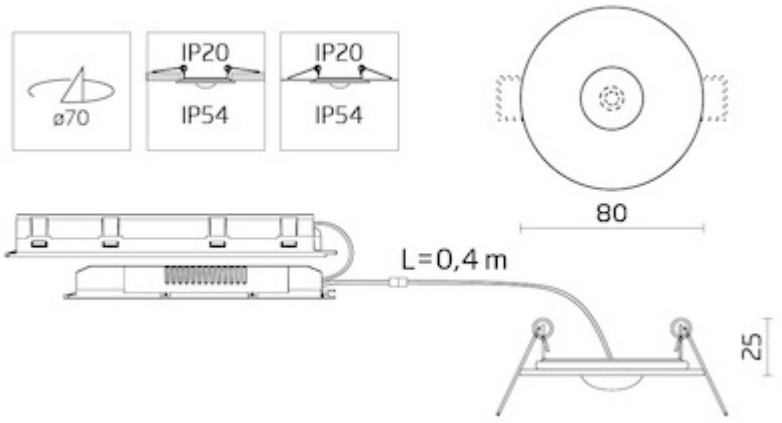

[m]	[m]	[m]	[m]	[m]	[m]
2.00	6.97	15.22	10.18	5.38	2.37
2.50	8.17	17.99	12.03	6.24	2.52
3.00	9.10	20.58	13.69	6.83	2.62
3.50	9.79	22.96	14.95	7.13	2.62
4.00	9.86	25.01	15.95	7.37	2.55
4.50	9.36	26.47	16.21	7.43	2.36
5.00	8.87	27.31	15.99	7.41	2.07
6.00	5.72	27.27	14.17	7.01	1.07
7.00	-	21.01	5.99	5.88	-
8.00	-	14.55	3.43	3.36	-

