Glamox

C25-R600×600 G2 3000-5000 DALI ML 840 MP

An ultra-lightweight, economical, thin, backlit troffer luminaire for general use.

Item No.	C25147703
GTIN	5903531477035
Stock status code	A

CE III LED IP40 EPD

Technical specifications

Mounting	
Product Mounting	Ceiling recessed

General	
Product shape	Square
EPD (Environmental Product Declaration)	true

LMS System	
Number of DALI addresses	1
LMS Protocol	DALI

Electrical Data	
Leakage Current (mA)	0.33
Main Feed AC (V) Min	220
Main Feed AC (V) Max	240
Main Feed Frequency Min	50
Main Feed Frequency Max	60
Total Consumption (W)	34.1
IEC Protection Class	III
Number Of Luminaire MCB 10B	33
Number Of Luminaire MCB 10C	33
Number Of Luminaire MCB 16B	54
Number Of Luminaire MCB 16C	54
Number Of Luminaire MCB 20C	67
Number Of Luminaire MCB 25C	84
Multi-lumen (ML) min. power consumption (W)	22.4
Multi-lumen (ML) default power consumption (W)	34.1
Multi-lumen (ML) max. power consumption (W)	40.2

Optic	
Optic Name	MP - Micro prismatic diffuser
UGR (70/50/20 & 4H-8H crosswise)	19
Diffuser Material Design	Prismatic
Optic main category	Diffuser

Certificates	
Certification	ENEC;HACCP;PZH
DALI 2 certified	true

Technical Data	
Minimum TA (°C)	0
Maximum TA (°C)	25
IK classification	06
IP classification	40 from underneath \ 20 from above

Light Technical Data	
Light source	LED
Lumen Out (lm)	4488
Lumen Per Watt (lm/W)	132
Lamp colour temp (K)	4000
Colour Rendering Index	>80
Multi-lumen (ML) min. lumen	3072
Multi-lumen (ML) default lumen	4488
Multi-lumen (ML) max. lumen	5148
MacAdam step	3
Energy Class Light Source	D
Minimum Dim Level (%)	1
Light Source Included	true
Dimmable	true
PstLM: Flicker (<)	0.03
SVM: Stroboscopic Visibility Measure (<)	0.008

Driver / Ballast	
Type of LED Driver	DALI ML: Multi lumen
DALI-2 part 251, 252, 253	false
Number of Driver	1

Lifetime	
LED Lifetime L80B50 Ta25 (h)	100 000
LED Lifetime L90B50 Ta25 (h)	50 000
Driver lifetime at Ta=25, 10% failure rate (h)	100000
Luminous flux decline (LLMF) 50.000h Ta25	0.89

Housing	
Body Material	Aluminium
Body Colour	WH - White
Main Body Colour Name	White

Dimensions	
Length (mm)	595
Width (mm)	595
Height (mm)	30
Item Net Weight (kg)	2.3

Termination	
Termination	5×2.5mm2 Push In
Through Wiring	5×1.5

Logistic Data	
Item Gross Weight (kg)	2.5

Illustrations

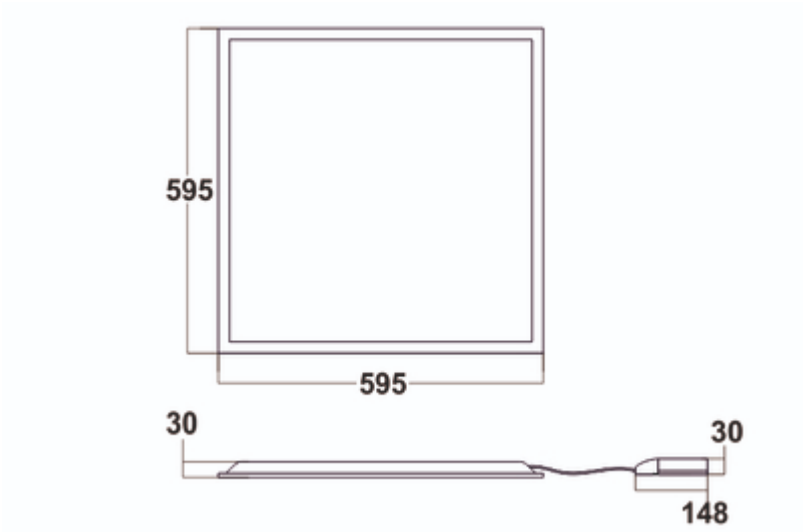

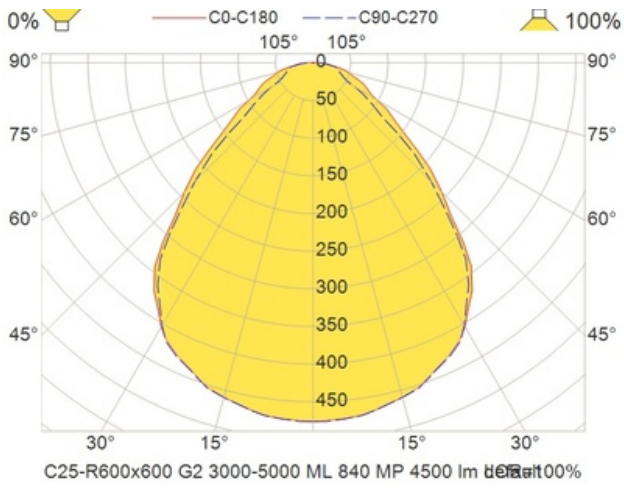

C25-R600x600 G2 3000-5000 ML 840 MP 4500 lm default 100%

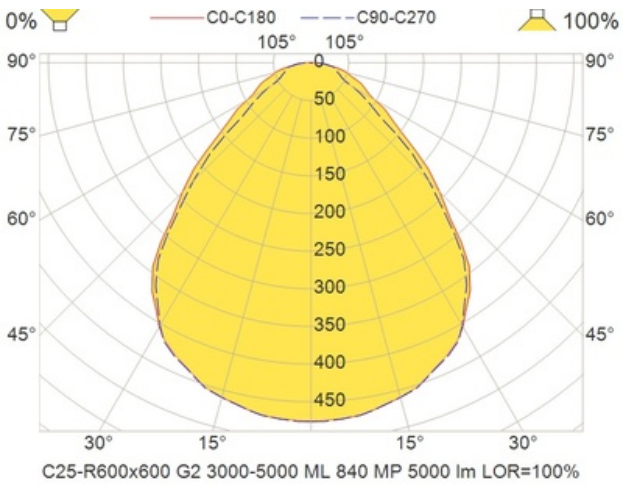

C25-R600x600 G2 3000-5000 ML 840 MP 5000 lm LOR=100%

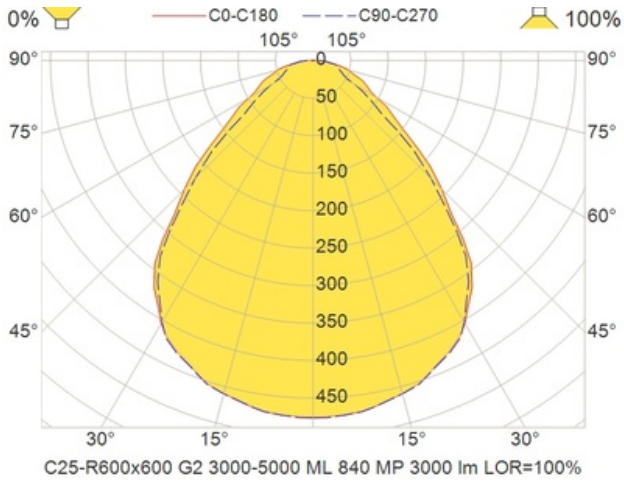

C25-R600x600 G2 3000-5000 ML 840 MP 3000 lm LOR=100%