Glamox

C25-R600×600 G2 3000-5000 HF ML 830 MP

An ultra-lightweight, economical, thin, backlit troffer luminaire for general use.

Item No.	C25147690
GTIN	5903531476908
Stock status code	A

Technical specifications

Mounting	
Product Mounting	Ceiling recessed

General	
Product shape	Square
EPD (Environmental Product Declaration)	true

Electrical Data	
Leakage Current (mA)	0.4
Main Feed AC (V) Min	220
Main Feed AC (V) Max	240
Main Feed Frequency Min	50
Main Feed Frequency Max	60
Total Consumption (W)	34.1
IEC Protection Class	III
Number Of Luminaire MCB 10B	17
Number Of Luminaire MCB 10C	28
Number Of Luminaire MCB 16B	27
Number Of Luminaire MCB 16C	45
Number Of Luminaire MCB 20C	56
Number Of Luminaire MCB 25C	70
Multi-lumen (ML) min. power consumption (W)	22.4
Multi-lumen (ML) default power consumption (W)	34.1
Multi-lumen (ML) max. power consumption (W)	40.2

Optic	
Optic Name	MP - Micro prismatic diffuser
UGR (70/50/20 & 4H-8H crosswise)	19
Diffuser Material Design	Prismatic
Optic main category	Diffuser

Certificates	
Certification	ENEC;HACCP;PZH

Technical Data	
Minimum TA (°C)	0
Maximum TA (°C)	25
IK classification	06
IP classification	40 from underneath \ 20 from above

Light Technical Data	
Light source	LED
Lumen Out (lm)	4264
Lumen Per Watt (lm/W)	125
Lamp colour temp (K)	3000
Colour Rendering Index	>80
Multi-lumen (ML) min. lumen	2918
Multi-lumen (ML) default lumen	4264
Multi-lumen (ML) max. lumen	4891
MacAdam step	3
Energy Class Light Source	E
Light Source Included	true
Dimmable	false
PstLM: Flicker (<)	0.03
SVM: Stroboscopic Visibility Measure (<)	0.008

Driver / Ballast	
Type of LED Driver	HF ML: Multi lumen
Number of Driver	1

Lifetime	
LED Lifetime L80B50 Ta25 (h)	100 000
LED Lifetime L90B50 Ta25 (h)	50 000
Driver lifetime at Ta=25, 10% failure rate (h)	100000
Luminous flux decline (LLMF) 50.000h Ta25	0.89

Housing	
Body Material	Aluminium
Body Colour	WH - White
Main Body Colour Name	White

Dimensions	
Length (mm)	595
Width (mm)	595
Height (mm)	30
Item Net Weight (kg)	2.0792

Termination	
Termination	3×2.5mm2 Push In

Logistic Data	
Item Gross Weight (kg)	2.26

Illustrations

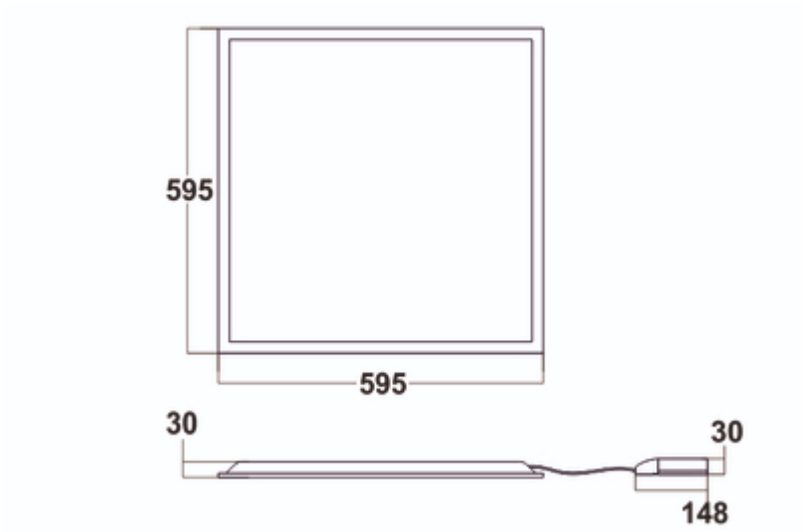

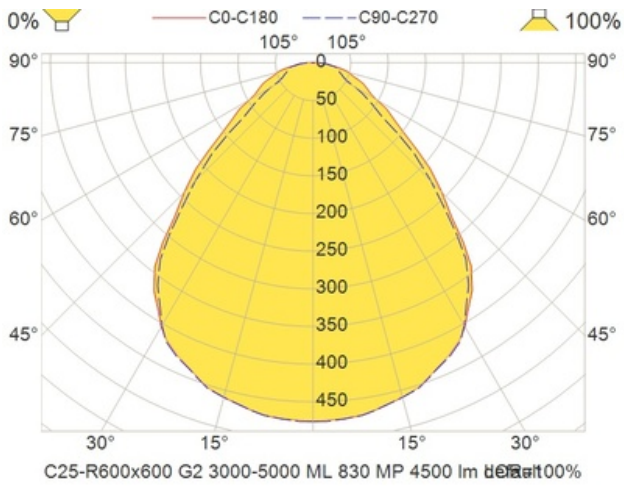

C25-R600x600 G2 3000-5000 ML 830 MP 4500 lm default 100%

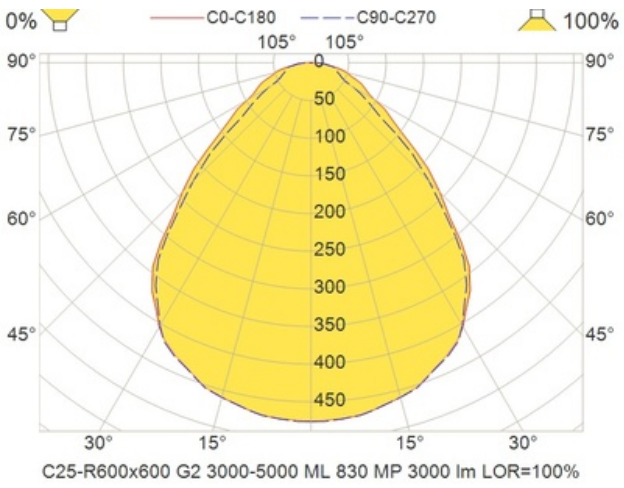

C25-R600x600 G2 3000-5000 ML 830 MP 3000 lm LOR=100%

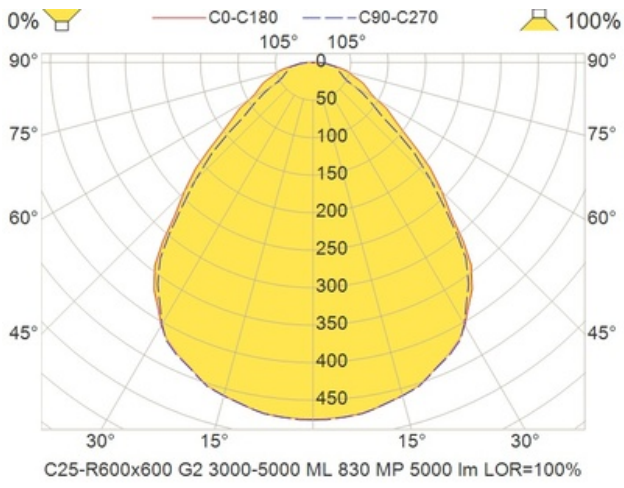

C25-R600x600 G2 3000-5000 ML 830 MP 5000 lm LOR=100%