LINERGY
EMERGENCY LIGHTING

cod. A032

STAFFA FISSAGGIO A PARETE
BRAKET FOR WALL FASTENING
LYRA EVO, LEXIT

SCATOLA - BOX 503

1

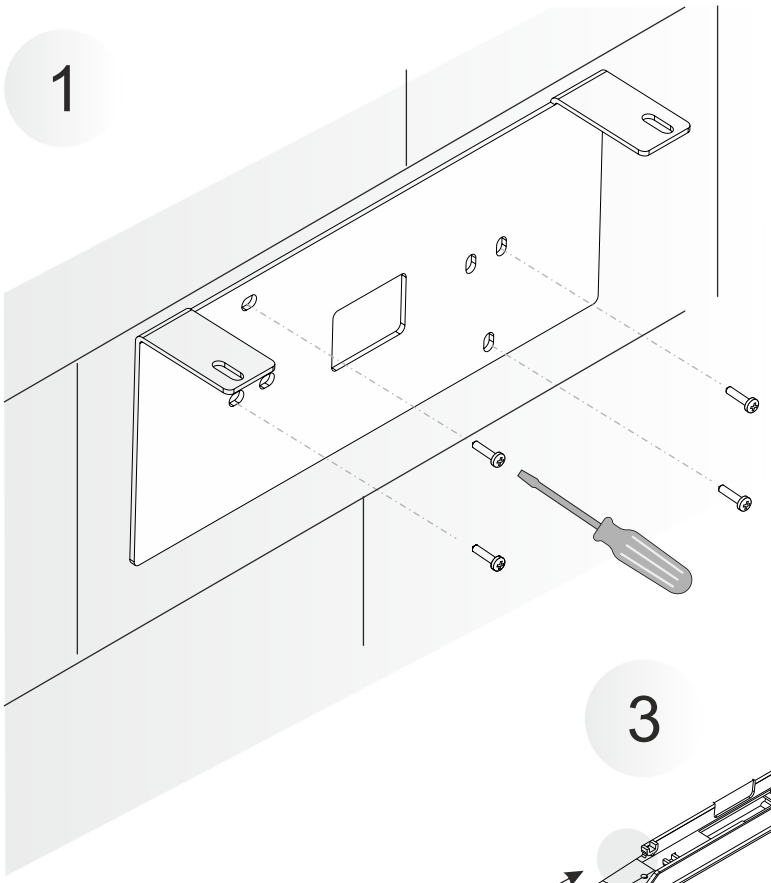

2

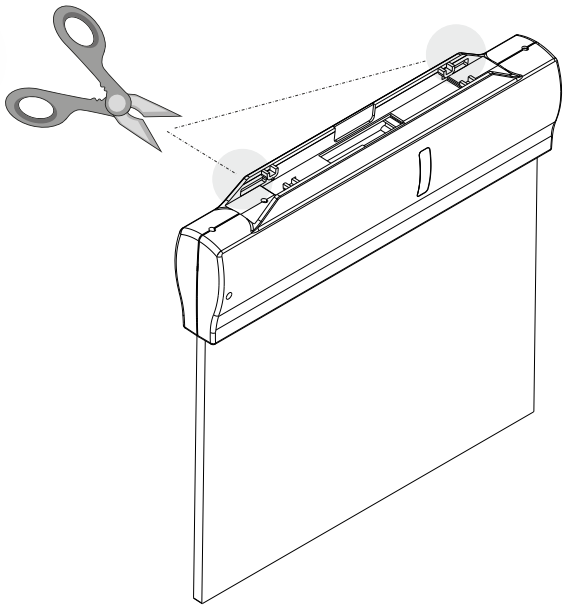

3

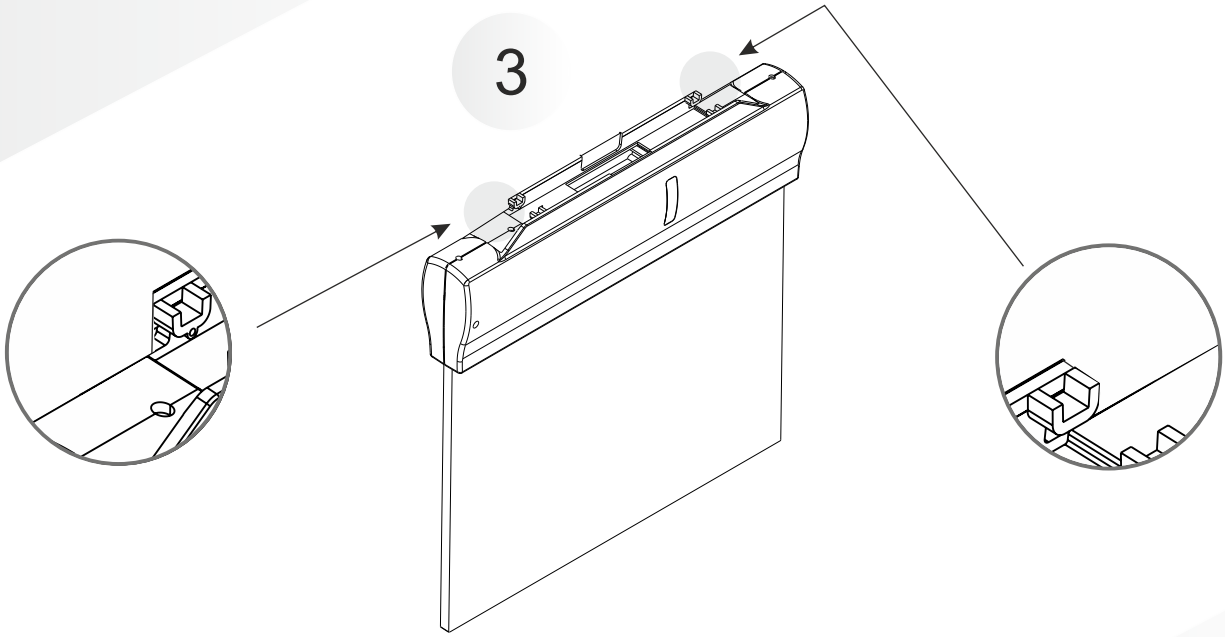

4

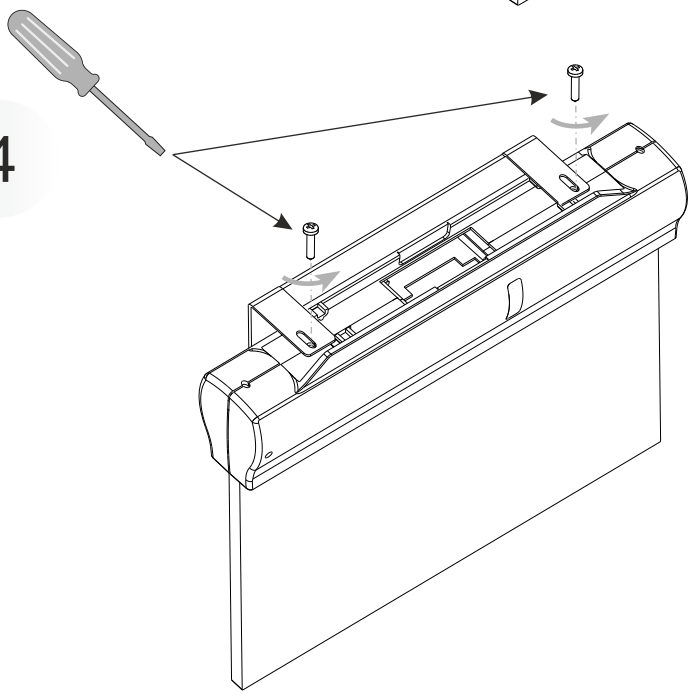

5

