Arpool S Projector

Specification Sheet



UL STD 676

water feature and fountain rated

IP68

ASP

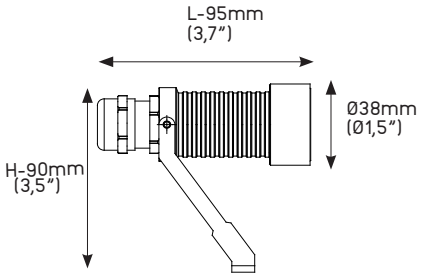

ASPS

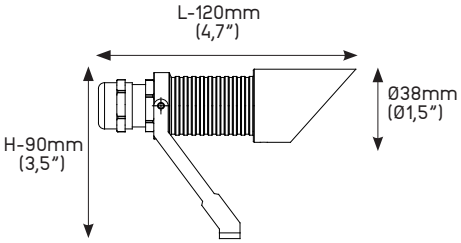

LUMINAIRE FEATURES

Design and Application

- Installation depth max. up to 5m (16')
- Glare reduction accessory - snoot
- DMX, DALI, 0-10V compatible (remote)
- Surface mount (floor/wall) installation
- Underwater architectural / landscape lighting
- Fountains and water features

Performance

- IK10, Tempered glass, crystal clear
- Chlorine and saline environment
- Stainless Steel type 316L, marine grade
- Galvanic current protection
- Thermal fold back technology
- LED Lifetime TM-21 @ 105°C L80(24K) = 145,000 hours
- Supplied with oil and water resistant 3m (10') feed cable as standard
- CRI: > 85
- 3 Step MacAdam

Safety

- Remote power supply
- Low voltage operation

Sustainabilty

- Recyclable material

Acessories

- 202135 - Adjustable waterproof wall duct 17mm-25mm (0,66"- 0,98")

Power suplies

- List of proposed power supplies that are to be ordered separately.
- Click here for list of available drivers.
- Click here for voltage drop and distances.

Note

Underwater luminaire – must be constantly submersed.

Click here to download fixure instalation manual.
Click here to download CAD file.
Click here to download IES-LTD data.

Arpool S Projector

ORDERING INFORMATION

	MODEL	
○	ASP	• ASP - H-90mm x Ø38mm x L-95mm (H-3,5”x Ø1,5”x L-3,7”)
●	ASPS	• ASPS - H-90mm x Ø38mm x L-120mm (H-3,5”x Ø1,5”x L-4,7”)
	POWER	
○	L	• L - 3W, 3000-4000K, 250lm
●	H	• H - 6W, 3000-4000K, 450lm • H - 6W, RGBW (W 4000K)
	COLOR TEMP.	
○	27	• 27 - 2700K
●	30	• 30 - 3000K
○	40	• 40 - 4000K
○	TW	• TW - Tunable white (2200-4000K)
○	RGBW	• RGBW (W 4000K)
	OPTICS	
○	SP	• SP - Spot - 15°
○	FL	• FL - Flood - 40°
●	W	• W - Wide - 70°
○	SPX	• SPX - Spot - 15° + hex
○	FLX	• FLX - Flood - 40° + hex
○	WX	• WX - Wide - 70° + hex
	VOLTAGE	
○	12	• 12 - 12VDC fixture voltage
●	24	• 24 - 24VDC fixture voltage
	OPTIONS	
●	3	• 3* - standard feed cable 3m (10’)
○	6	• 6 - luminaire supplied with 6m (20’) feed cable
○	9	• 9 - luminaire supplied with 9m (30’) feed cable
○	20	• 20 - luminaire supplied with 20m (65’) feed cable
	GLARE CONTROL	
○	1	• 1 - Half moon

Arpool S Projector

ACESSORIES

Waterproof wall duct - 202135

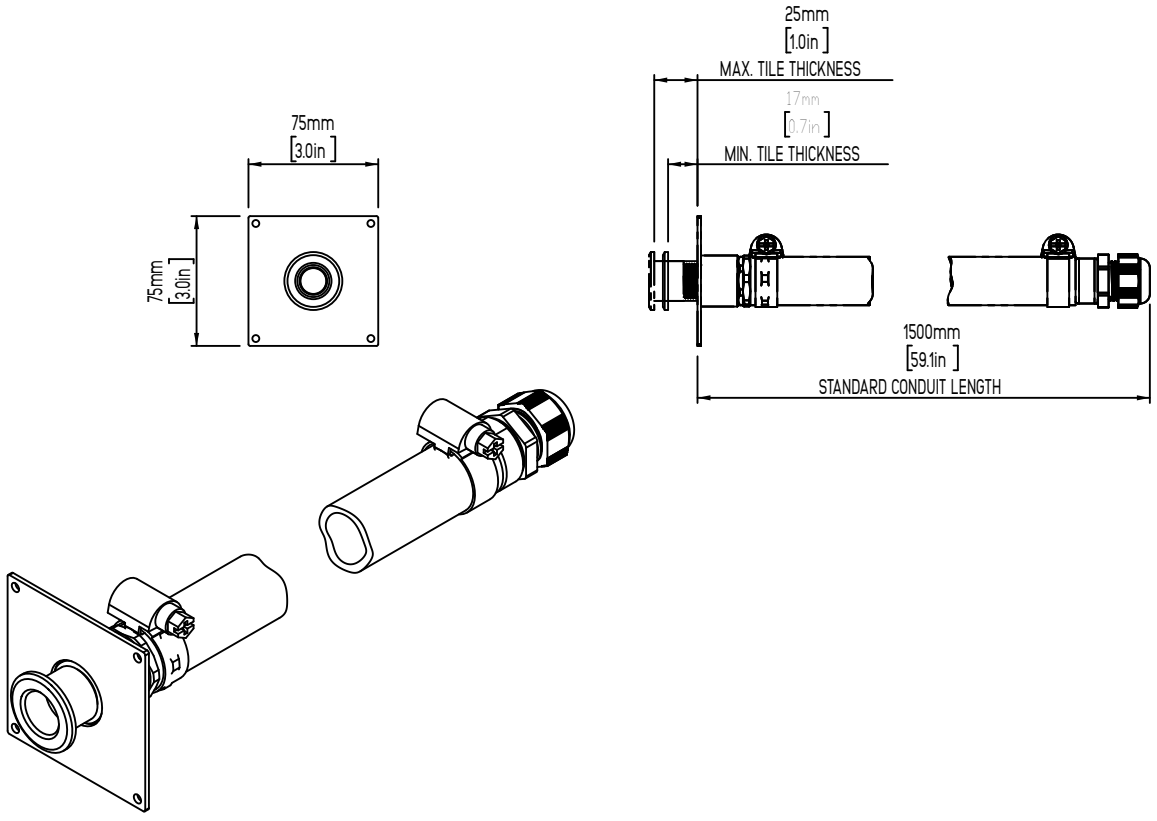

Note:
For details on specific depths, tiling thickness and other please refer to both Installation instructions for fixture and housing.